MOEN

Buy it for looks. Buy it for life.®

Specifications

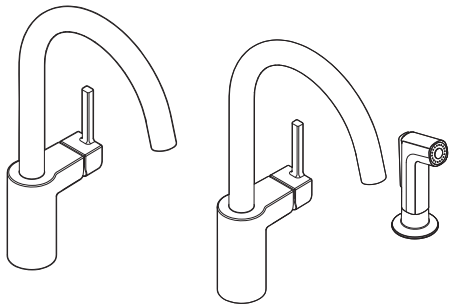

ALIGN™
Single Handle Single Hole Mount High Arc Kitchen Faucet

Models: 7365 series
7165 series with spray

NOTE: 7165 FAUCET IS DESIGNED TO BE INSTALLED THRU 2 HOLES, 1-1/2" (38mm) MIN. DIA. FOR VALVE, & 1-1/4" (32mm) MIN.DIA. HOLE FOR SIDE SPRAY (OPTIONAL 3-HOLE ESCUTCHEON 141002 AVAILABLE)

FAUCET DESCRIPTION
- Metal construction with various finishes identified by suffix
- High arc spout provides the height and reach to fill or clean large pots
- Flexible supply lines with 3/8" compression fittings
- 360˚ rotating spout
- Faucet designed for handle to be mounted on right side

OPERATION
- Single handle lever
- Temperature controlled by 100˚ arc of handle travel

FLOW
- Spout flow is limited to 1.5 gpm (5.7 L/min) max at 60 psi

CARTRIDGE
- 1255™ Duralast™ cartridge for Single-Handle Faucets

STANDARDS
- Third party certified to ASME A112.18.1/CSA B125.1 and all applicable requirements referenced therein including NSF 61/9G
- Complies with California Proposition 65 and with the Federal Safe Drinking Water Act
- **ADA** for lever handle

WARRANTY
- Lifetime limited warranty against leaks, drips and finish defects to the original consumer purchaser
- 5 year warranty if used in commercial installations

GREEN UPC ®

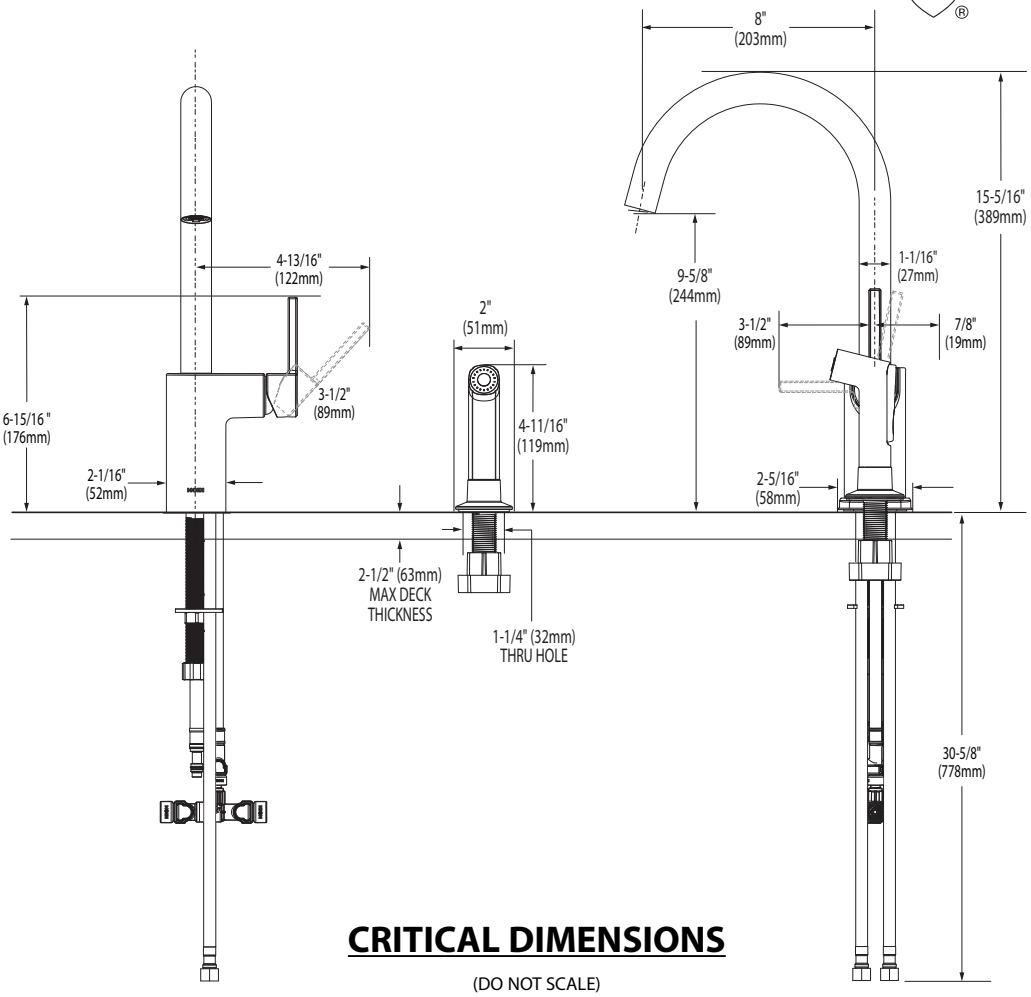

CRITICAL DIMENSIONS

(DO NOT SCALE)

TO ORDER PARTS CALL: 1-800-BUY-MOEN
www.moen.com

Rev. 1/14

ID:01/20/14 SPC13172 S000014702
Release:01/14