**Effective Date 1/06/2025**

**Supersedes Price Book**
**09/15/2023**

Johnson Controls

# Fire Suppression Products

## U. S. List Prices

*for*

## Sprinklers, Devices, Grooved Piping, Accessories and Repair Parts

## IMPORTANT NOTICE

Customer acknowledges and agrees that, in the absence of a previously executed agreement between the parties, products provided hereunder are provided pursuant to the TFPP General Terms and Conditions of Sale. **ATTENTION IS DIRECTED TO THE LIMITATION OF LIABILITY, WARRANTY, INDEMNITY AND OTHER CONDITIONS AVAILABLE AT HERE**

# Fire Suppression Products - Price Book
## Table of Contents

## Section 1 - Standard Spray Sprinklers

TY-L, Pendent, Recessed Pendent & Upright, K=5.6, ½" NPT . . . 1–1
TY-L, Upright Sprinklers, K=8.0, ¾" NPT . . . 1–2
TY-L, Upright Sprinklers, K=8.0, ½" NPT . . . 1–2
TY-L, Horizontal Sidewall Sprinkler, K=5.6, ½" NPT . . . 1–2
TY-FRL, Pendent, Recessed Pendent & Upright, Quick Response Sprinkler, K=5.6, ½" NPT . . . 1–3
TY-FRL, Pendent & Upright, Quick Response Sprinkler, K=8.0, ¾" NPT . . . 1–4
TY-B, 5mm Bulb, Pendent, Recessed Pendent and Upright, K=5.6, ½" NPT . . . 1–5 - 1–6
TY-B, 5mm Bulb, Pendent and Upright Sprinklers, K=8.0, ½" NPT . . . 1–7
TY-B, 5mm Bulb, Pendent, Recessed Pendent and Upright Sprinklers, K=8.0, ¾" NPT . . . 1–8
TY-B, 5mm Bulb, Horizontal, Recessed Horizontal, and Vertical Sidewall Sprinklers, K=5.6, ½" NPT . . . 1–9
TY-B, 5mm Bulb, Standard Response Upright Sprinklers Listed for Foam Applications, K=5.6, ½" NPT . . . 1–10
TY-FRB, 3mm Bulb, Quick Response, Pendent, Recessed Pendent and Upright Sprinklers, K=4.2, ½" NPT . . . 1–11
TY-FRB, 3mm Bulb, Quick Response, Pendent, Recessed Pendent and Upright Sprinkler, K=5.6, ½" NPT . . . 1–12
TY-FRB, 3mm Bulb, Quick Response, Pendent, Recessed Pendent and Upright Sprinkler, K=8.0, ¾" NPT . . . 1–13
TY-FRB, 3mm Bulb, Quick Response, Pendent and Upright Sprinkler, K=8.0, ½" NPT . . . 1–14
TY-FRB, 3mm Bulb, Quick Response, Horizontal, Recessed Horizontal Sidewall and Vertical Sidewall, K=5.6, ½" NPT . . . 1–15
TY-FRB, 3mm Bulb, Quick Response Upright Sprinklers Listed for Foam Applications, K=5.6, ½" NPT . . . 1–16
Illusion Sprinkler ELO Extra Large Orifice, Concealed Pendent Sprinklers,K=11.2, ¾" NPT . . . 1–17
RFII, Standard Response, “Royal Flush II” Pendent Concealed Sprinklers, K=5.6, ½" NPT . . . 1–18
RFII, Quick Response, “Royal Flush II” Pendent Concealed Sprinklers, K=5.6, ½" NPT . . . 1–19
RFII, Quick Response, “Royal Flush II” Concealed Horizontal Sidewall Sprinklers, K=5.6, ½" NPT . . . 1–20
RFII-MRI, Standard Response, “Royal Flush II” Pendent Concealed Sprinklers, K=5.6, ½" NPT . . . 1–21
RFII-MRI, Quick Response, “Royal Flush II” Pendent Concealed Sprinklers, K=5.6, ½" NPT . . . 1–22

## Section 2 - Extended Coverage Sprinklers

EC-25, Upright, Area/Density, Extended Coverage, K=25.2, 1" NPT . . . 2–1
EC-14, Upright Sprinklers, K=14.0, ¾" NPT . . . 2–1
EC-14, Pendent and Recessed Pendent Sprinklers, K=14.0, ¾" NPT . . . 2–2
EC-11, Pendent, Recessed Pendent and Upright Sprinklers, K=11.2, ¾" NPT . . . 2–3
TY-FRB, 3mm Bulb, Quick Response, Extended Coverage, Horizontal & Recessed Horizontal Sidewall, K=5.6, ½" NPT . . . 2–4
TY-FRB, 3mm Bulb, Quick Response, Extended Coverage, Horizontal & Recessed Horizontal Sidewall, K=8.0, ¾" NPT . . . 2–5
ELO SW-20, ECOH, Sidewall Sprinklers, K=11.2,¾" NPT . . . 2–6
ELO SW-24, ECOH, Sidewall Sprinklers, K=11.2, ¾" NPT . . . 2–6
ELOC Extended Coverage, Concealed Sprinklers, K=11.2, ¾" NPT . . . 2–6
RFII EC, Flat Plate Concealed Pendent Sprinklers Extended Coverage, Quick & Standard Response, K=5.6. . . . 2–7
RFII-C, 5.6 K-factor, Concealed Pendent Sprinklers for Corridors & Hallways, ½" NPT ECLH . . . 2–8
RFII-MRI EC, Flat Plate Concealed Pendent Sprinklers Extended Coverage, Quick Response, K=5.6. . . . 2–9
RFIII, Flat Plate Concealed Horizontal Sidewall Sprinklers Extended Coverage, Quick Response, K=8.0. . . . 2–10
TY-FRL, Extended Coverage Quick Response, Horizontal Sidewall Sprinkler, K=5.6, ½" NPT . . . 2–10
TY-FRL, Quick Response, Extended Coverage Horizontal Sidewall Sprinklers, K=8.0, ¾" NPT . . . 2–11
CHEC, ECLH Concealed Horizontal Sidewall Extended Coverage Sprinklers, K=8.0, ¾" NPT . . . 2–11
EC-8, QR, ECLH, Pendent and Recessed Pendent Sprinklers, K=8.0, ¾" NPT . . . 2–12
EC-8C, QR, ECLH, Pendent and Recessed Pendent Sprinklers for Corridors & Hallways, K=8.0, ¾" NPT . . . 2–13
EC-5, QR, Pendent, Recessed Pendent and Sidewall Sprinklers, K=5.6, ½" NPT . . . 2–14

## Section 3- Storage Sprinklers

ESFR-34, Early Suppression, Fast Response Sprinkler, K=33.6, 1-¼" NPT . . . 3–1
ESFR-25, Early Suppression, Fast Response Sprinkler, K=25.2, 1" NPT . . . 3–1
EC-25, Upright, Area/Density, Extended Coverage, K=25.2, 1" NPT . . . 3–2
ESFR-22, Early Suppression, Fast Response Pendent Sprinkler, K=22.4, 1" NPT . . . 3–2
ESFR-17, Early Suppression, Fast Response Upright Sprinkler, K=16.8, ¾" NPT . . . 3–3
ESFR-17, Early Suppression, Fast Response Pendent Sprinkler, K=16.8, ¾" NPT . . . 3–3
ESFR-17, 3mm Bulb, Early Suppression, Fast Response Pendent Sprinkler, K=16.8, ¾" NPT . . . 3–3
ESFR-17 & ESFR-25, Dry-Type, Early Suppression, Fast Response Pendent Sprinkler, K=16.8 & K=25.2, 1-¼" NPT . . . 3–4
ESFR-14, Early Suppression, Fast Response Sprinkler, K=14.0, ¾" NPT . . . 3–4
Ultra K17, Upright, Thread Specific Application, K=16.8, ¾" NPT . . . 3–5
K17-231, Thread, Upright, K=16.8, ¾" NPT . . . 3–5
K17-231, Thread, Pendent, K=16.8, ¾" NPT . . . 3–5
ELO-231, Standard Response, Upright and Pendent Sprinklers, K=11.2, ½" NPT & ¾" NPT . . . 3–6
ELO-231B, Standard Response, Upright and Pendent Sprinklers, K=11.2, ½" NPT & ¾" NPT . . . 3–7
ELO-231 FRB, Quick Response, Upright, Pendent Sprinklers, K=11.2, ¾" NPT . . . 3–8
LD, Large Drop Upright Sprinklers, K=11.2, ¾" NPT . . . 3–8
TY-B, 5mm Bulb, Standard Response, Intermediate Level Upright Sprinklers with Shield, K=5.6, ½" NPT . . . 3–9
TY-B, 5mm Bulb, Standard Response, Intermediate Level Upright Sprinklers with Shield, K=8.0, ¾" NPT . . . 3–9
TY-FRB, 3mm Bulb, Quick Response, Intermediate Level Upright Sprinklers with Shield, K=5.6, ½" NPT . . . 3–10
TY-FRB, 3mm Bulb, Quick Response, Intermediate Level Upright Sprinklers with Shield, K=8.0, ¾" NPT . . . 3–10
TY-L, Standard Response, Intermediate Level Upright and Pendent Sprinklers with Shield, K=5.6, ½" NPT . . . 3–11
TY-L, Standard Response, Intermediate Level Upright Sprinklers with Shield, K=8.0, ¾" NPT . . . 3–12
TY-FRL, Quick Response, Intermediate Level Upright and Pendent Sprinkler with Shield, K=5.6, ½" NPT . . . 3–13
TY-FRL, Quick Response, Intermediate Level Upright and Pendent Sprinkler with Shield, K=8.0, ¾" NPT . . . 3–14

## Section 4 - Residential Products

LFII, Low Flow Pendent, Fast Response, K=3.0 , ½" NPT . . . 4–1
LFII, Low Flow Horizontal Sidewall, K=4.2, ½" NPT . . . 4–1
LFII, Low Flow Horizontal Sidewall, K=4.4, ½" NPT . . . 4–2
LFII, Low Flow Pendent Modified, K=4.9, ½" NPT . . . 4–3
LFII, Low Flow Pendent, K=5.8, ½" NPT . . . 4–4
LFII, Residential Concealed Pendent Domed Plate, K=4.9 (pendent), ½" NPT . . . 4–4
LFII, Residential Flat-Plate Concealed Pendent Sprinkler, Wet Pipe System, K=4.9, ½" N.P.T. . . . 4–5
LFII, Lead-Free Residential Flat-Plate Poly Concealed Pendent Sprinkler, Wet Pipe System, K=4.9, ½" N.P.T. . . . 4–6
LFII - Residential Concealed Pendent Sprinkler, Flat Plate Wet Pipe System, K=5.8, 1/2" N.P.T. . . . 4–7
LFII - Residential Polymeric Concealed Pendent Sprinkler, Flat Plate Wet Pipe System, K=3.0, ½" NPT . . . 4–8
LFII, Residential Concealed Horizontal Sidewall Sprinkler, K=4.2, ½" NPT . . . 4–9
LFII, Residential NFPA 13 Optimized Horizontal Sidewall Sprinkler, K=5.8 & K=5.6, ½" NPT . . . 4–10
LFII, Residential NFPA 13 Optimized Pendent Recessed & Concealed, K=6.9, ¾" NPT . . . 4–11
LFII, Residential Dry, Recessed Pendent, K=4.9 . . . 4–12
LFII, Residential Dry, Horizontal Sidewall and Recessed Horizontal Sidewall, K=4.4 . . . 4–12
Attic Sprinklers, K=4.2, ½" NPT , K=5.6, ½" NPT & K=8.0, ¾" NPT , Models BB, SD, HIP & AP . . . 4–13
Residential Domestic Shutoff Valve . . . 4–14
Residential Components . . . 4–14

## Section 5 - Dry Sprinklers

DS-1, Dry, Standard Coverage, Pendent, Upright & Horizontal Sidewall, Standard Response, K=5.6 , 1" NPT . . . . . 5–1
DS-1, Dry, Standard Coverage, Pendent, Upright & Horizontal Sidewall, Standard Response, K=5.6, ¾" NPT . . . . . 5–2
DS-1, Dry, Standard Coverage, Pendent, Upright & Horizontal Sidewall, Quick Response, K=5.6 . . . . . 5–3
DS-1, Dry, Extended Coverage, Horizontal Sidewall, Quick Response & Standard Response, K=5.6. . . . . 5–4
DS-1, Dry, Stainless Steel, Standard Coverage, Pendent, QR or SR, K=5.6 . . . . . 5–5
DS-1, Dry, Stainless Steel, Standard & Extended Coverage, Horizontal Sidewall, QR or SR, K=5.6 . . . . . 5–6
DS-8, Dry, Standard Coverage, Pendent, Standard Response, K=8.0 . . . . . 5–7
DS-8, Dry, Standard Coverage, Pendent, Quick Response, K=8.0 . . . . . 5–8
DS-8, Dry, Standard Coverage, Horizontal Sidewall, Standard & Quick Response, K=8.0 . . . . . 5–9
DS-2, Dry, ELO Standard Coverage, Pendent, Standard Response, K=11.2. . . . . 5–10
DS-2, Dry, ELO Standard Coverage, Pendent, Quick Response, K=11.2 . . . . . 5–11
DS-2, Dry, ELO Extended Coverage, Pendent, Quick Response & Standard Response, K=11.2 . . . . . 5–12
DS-3, Dry, Extended Coverage Ordinary Hazard (ECOH), Horizontal Sidewall, 1" NPT , 3 mm bulb, K=11.2 . . . . . 5–13
DS-C, Dry Concealed, Standard Response, K=5.6 . . . . . 5–14
DS-C, Dry Concealed, Quick Response, K=5.6 . . . . . 5–15
DS-ECC, Dry Extended Concealed Coverage , Quick Response, K=5.6. . . . . 5–16
ESFR-17 & ESFR-25, Dry-Type, Early Suppression, Fast Response Pendent Sprinkler, K=16.8 & K=25.2, 1-¼" NPT . . . . . 5–17

## Section 6 - Special Sprinklers

CC3, Combustible Concealed Space Upright Sprinklers, Specific Application, K=4.2, ½" NPT . . . . . 6–1
CC3, Combustible Concealed Space Upright Sprinklers, Specific Application, K=5.6, ½" NPT . . . . . 6–1
WS, Vertical and Horizontal Sidewall Window Sprinklers, K=5.6, ½" NPT . . . . . 6–2
CWS, Concealed Pendent Vertical Sidewall Window Sprinklers, K=5.6, ½" NPT . . . . . 6–3
TY-B, Stainless Steel & Titanium, Upright and Pendent Sprinkler, K=5.6 & 8.0, ½" & ¾" NPT . . . . . 6–4
TY-B, Stainless Steel & Titanium, Horizontal Sidewall Sprinkler, K=5.6, ½" NPT . . . . . 6–5
TY-L, Stainless Steel, Pendent Sprinkler, SR, K=5.6 & 8.0, ½" & ¾" NPT . . . . . 6–5
TY-FRB, Stainless Steel & Titanium, Upright and Pendent Sprinkler, QR, K=5.6 & 8.0, ½" & ¾" NPT . . . . . 6–6
TY-FRB, Stainless Steel & Titanium, Horizontal Sidewall Sprinkler, QR, K=5.6, ½" NPT . . . . . 6–7
TY-B & TY-FRB, Poly-Stainless Upright, Pendent and Horizontal Sidewall Sprinkler, K=5.6 & 8.0, ½" & ¾" NPT. . . . . 6–8
Tyco® RAVEN™, I-Series Institutional Pendent & Horizontal Sidewall Sprinkler, QR, Standard & Extended Coverage . . . . . 6–9
PH2, Institutional Pendent, Standard Response Sprinkler, K=5.6, ½" NPT . . . . . 6–10
PH5, Institutional Horizontal Sidewall, Standard Response Sprinkler, K=5.6, ½" NPT . . . . . 6–11
Issue “D” Quartzoid®, High Temperature, K=5.6, ½" NPT . . . . . 6–12
Issue “D” Quartzoid®, Series – High Temperature, K=8.0, ¾" NPT . . . . . 6–12

## Section 7 - Nozzles and Sprinkler Accessories

D-3, Protectospray Nozzles, ½" NPT . . . 7–1
EA-1, Protectospray Nozzles . . . 7–2
High Velocity Spray Nozzles Type HV. . . . 7–3
Cooling Tower Nozzles, ¾" NPT , K=2.90 . . . 7–3
Exposure Sprinklers, Model A, ½" NPT . . . 7–4
Exposure Nozzles, B, ½" or ¾" NPT . . . 7–4
B-1,½" Foam Water Sprinkler, ½" Male NPT . . . 7–5
Type D4a, Protectospray Directional Spray Nozzles, Open, Medium Velocity, ½" NPT . . . 7–5
FTR-1, Fixed Temperature Release for Deluge & Preaction Systems Wet or Dry Pilot Release Service, ½" NPT . . . 7–6
Blow-Off Caps and Dust Caps for Mulsifyre Projectors and Nozzles . . . 7–6
Blow-Off Plugs for Protectospray Nozzles, Model D-3 . . . 7–6
Miscellaneous Escutcheons . . . 7–7
Typical Escutcheons . . . 7–8
Sprinkler Head Cabinets . . . 7–9
G1 and G4 Sprinkler Guards, G1/S1 and G4/S3 Guards and Shields . . . 7–9
EG-25 Sprinkler Guards (For Series ESFR-22 and ESFR-25 Storage Sprinklers). . . . 7–9
G5 Sprinkler Guard (For Series DS-1 Dry Sprinklers) . . . 7–10
G2 Guard, WS-2 Shield and WSG-2 Guard & Shield for ELO-231 Series . . . 7–10
Wide Adapter Plates . . . 7–10
ES-1 and ES-2 Shield for Tyco Pendent Sprinklers . . . 7–11
Special Services . . . 7–11
Sprinkler Wrenches . . . 7–12

## Section 8- Wet System Valves

AV-1-300, Alarm Valves . . . 8–1, 8–2
CV-1FR, Shotgun Riser Check Valve. . . . 8–3
RSV-1 Residential Shutoff Valve . . . 8–3
RC-1, Retard Chamber . . . 8–3
Resi-Risers . . . 8–4
RM-2 Riser Manifolds – Commercial . . . 8–4
RM-2 Base Riser Manifolds - Residential without Test & Drain Valve . . . 8–5
RM-2 Base Riser Manifolds - Residential with Test & Drain Valve . . . 8–5
RM-2 Base Riser Manifolds - Commercial . . . 8–5
RM-1 Riser Manifolds – Commercial & Residential . . . 8–6

## Section 9 - Water Motor Alarms

WMA-1, Water Motor Alarm . . . 9–1

## Section 10 - Dry Pipe Valves

DPV-1, Dry Pipe Valve . . . 10–1, 10–2

## Section 11 - Quick Opening Devices

"VIZOR" Model EDPA - Electronic Dry Pipe Accelerator. . . . 11–1
Model QRS-2 Quick Release Switch – Electronic Accelerator for Dry Pipe or Preaction Systems . . . 11–2
ACC-1, Dry Pipe Valve Accelerator . . . 11–3

## Section 12 - Air Maintenance Devices

Air Maintenance Devices . . . 12–1
Accessories for Air Maintenance Devices . . . 12–1

## Section 13 - Deluge Valves & Accessories

DV-5A Pre-Trimmed Deluge Systems - Wet Pilot, Dry Pilot, or Electric Pilot . . . 13–1, 13–2
DV-5A Pre-Trimmed Deluge Systems with Remote Resetting or Remote Resetting Pressure Reducing Trim . . . 13–3, 13–4
Model DV-5A Deluge Valves, Diaphragm Style and Trim Kits . . . 13–4, 13–5
Model DP-1, Dry Pilot Actuator . . . 13–6
Deluge Valve Accessories . . . 13–6
DV-5A Deluge Valve Replacement Parts . . . 13–7

## Section 14 - Preaction Systems

DV-5A Pre-trimmed Pre-action Systems Single Interlock - Wet Pilot, Dry Pilot, Electric Pilot . . . 14–1, 14–2
DV-5A Pre-trimmed Pre-action Systems Double Interlock - Electric/Pneumatic, Electric/Electric . . . 14–3, 14–4
DV-5A Deluge Valves, Diaphragm Style and Pre-action Trim Kits . . . 14–5, 14–6
Model DP-1, Dry Pilot Actuator . . . 14–6
DV-5A Deluge Valve Accessories for Wet, Dry, Electric, Remote Reset and Remote Reset Pressure Reducing Actuation . . . 14–7
DV-5A Deluge Valve Replacement Parts . . . 14–8
Red-E-Cabinets, with DV-5A Valves, Deluge, Wet, Dry & Electric Systems in Cabinets . . . 14–9 thru 14–11
Quell Switch Product Offerings, Valves and Red-E-Cabinets, . . . 14–12

## Section 15 - General Purpose Valves

CV-1F Grooved Check Valves . . . 15–1
Model #CV-300B - Grooved End Swing Check Valves . . . 15–1
Model BFV-300 Butterfly Valves - OPEN - 300 psi - Grooved . . . 15–2
Model BFV-300 Butterfly Valves - CLOSED - 300 psi - Grooved . . . 15–2
Model BFV-300 Butterfly Valves - Without Internal Supervisory Switches - 300 psi - Grooved . . . 15–2
Model BFV-300 Butterfly Valves - Wafer Style with Supervisory Switches - 300psi . . . 15–3
Model BFV-300 Spare Parts . . . 15–3
TJR Series O.S.&Y. Gate Valves F x F, G x G UL Listed and FM Approved . . . 15–4
TJP Series N.R.S. Gate Valves F x F, G x G, PIV, UL Listed and FM Approved . . . 15–5
Wall Indicators for TJP Series, UL Listed and FM Approved . . . 15–6
Post Indicators for TJP Series, UL Listed and FM Approved . . . 15–6
Model PRV-1A Pressure Regulating Valve Globe Style, 300 psi . . . 15–7
Model RV-1A Pressure Relief Valves Globe Style, 300 psi . . . 15–8

## Section 16 - Specialty Items

Valve System Accessories . . . 16–1
F1321 Sight Flow Connection . . . 16–1
Ball Drip Valves . . . 16–1
Fill or Drip Cups . . . 16–1
DD-1 (Drum Drip) Wiliag Drain . . . 16–1
Manual Control Stations . . . 16–2
G16AC812 Automatic Supervisory Air Supply . . . 16–2
Water and Air Gauges . . . 16–2
Fusible Links/Fire Door Links Type C . . . 16–2
Zonecheck Flow Switch Tester . . . 16–3
Sprinkler Identification Signs . . . 16–3
Restriction Unions . . . 16–3
LFP™ Antifreeze, minimum use temperature -10 °F (-23 °C) . . . 16–4
LFP™ Antifreeze+, minimum use temperature -25 °F (-32 °C) . . . 16–4

## Section 18 - Grooved Products

#579 G-FIRE – Rigid Coupling with Grade "A" EPDMA Center-Stop, Push-On Pre-Lubricated Gasket & Replacement Gaskets . . . 18-1
#577 G-FIRE – Rigid Coupling with Grade “A” EPDMA Fire Protection Pre-Lubricated Gasket . . . 18-2
#577 G-FIRE – Rigid Tri-Seal Coupling with Grade “E” EPDM Tri-Seal Gasket . . . 18-2
#705 – Flexible Coupling with Grade “A” EPDMA Fire Protection Pre-Lubricated Gasket . . . 18-3
#705 – Flexible Tri-Seal Coupling with Grade “E” EPDM Tri-Seal Gasket . . . 18-3
#707 Heavy-Duty Flexible Coupling with Grade “E” EPDM Gasket . . . 18-4
#716 – Reducing Coupling with Grade “E” EPDM Non-Lubricated Gasket . . . 18-4
#716 Reducing Coupling Plate . . . 18-4
Replacement Gaskets, Grade “E” EPDM Gasket for #716 Reducing Coupling . . . 18-5
#71 – Grooved Flange Adapter with Grade “E” EPDM Non-Lubricated Gasket . . . 18-5
#71 Flange Adapter – Metal Washer . . . 18-5
#71 Flange Adapter – Nut, Bolt, and Washer Gasket Kit . . . 18-6
Replacement Gaskets . . . 18-6
Coupling Nut and Bolt Kit . . . 18-6
GRINNELL Gasket Lubricant . . . 18-6
#510S – Fire Protection Short Pattern Grooved 90° Elbow . . . 18-7
#519S – Fire Protection Short Pattern Grooved Tee . . . 18-7
#501 – Fire Protection Standard Pattern Grooved 45° Elbow . . . 18-8
#510 – Fire Protection Standard Pattern Grooved 90° Elbow . . . 18-8
#510DE – 90° Elbow with 1" Outlet . . . 18-9
#519 – Fire Protection Standard Pattern Grooved Tee . . . 18-9
#260 – Grooved Cap . . . 18-10
#260 – Grooved Cap with $^1/_2$" Tap . . . 18-10
#260 – Grooved Cap with 1" Tap . . . 18-10
#40-5 – Strap . . . 18-11
#512 and #312 – Grooved $22^1/_2$° Elbow . . . 18-12
#511 and #311 – Grooved $11^1/_4$° Elbow . . . 18-12
#221 and #321 – Grooved Reducing Tee . . . 18-12
#550 and #350 – Concentric Reducer . . . 18-13
#341 – Grooved x Flanged Adapter 150 Lbs. – Schedule 40 . . . 18-14
#323 – Reducing Tee with Threaded Branch . . . 18-14
#327 – Grooved Cross . . . 18-14
#372 – Reducer Small End Threaded (Male) . . . 18-15
#391 – Groove x Male Thread Adapter Nipple . . . 18-15
#393 – Groove x Plain Adapter Nipple . . . 18-15
#730 – Threaded Mechanical Tee with Grade “E” EPDM Gasket Threaded Outlet . . . 18-16
#730 – Grooved Mechanical Tee with Grade “E” EPDM Gasket Grooved Outlet . . . 18-17
#730 – Grooved Mechanical Cross with Grade “E” EPDM Gasket Grooved Outlet . . . 18-17
#BFV-300 – Grooved Butterfly Valves Fire Protection . . . 18-18
#CV-1F – Grooved Check Valve . . . 18-18
Global Grooved Couplings – Packaging Quantity . . . 18-19
Global Grooved Fittings – Packaging Quantity . . . 18-20 – 18-21
Global Mechanical Tees – Packaging Quantity . . . 18-22

*In order to request regulatory or specification certifications/ representations please contact Tyco Trade Compliance at 215-362-0700 for assistance. In your request, please identify the part numbers and specific regulatory standards or contract specifications about which you are inquiring.*

Visit **www.tyco-fire.com/terms** for terms and conditions of sale.

## Section 20 - Miscellaneous

Discontinued Valve Replacement Parts
- Model “A” - Deluge Valve (2001) . . . 20-1
- Model DV-5 Deluge Valve Replacement Parts (2019) . . . 20-1
- Model PRV-1 & RV-1 Valve Replacement Parts (2021) . . . 20-2
- Model “F” and “G” - Alarm Valve (2003) . . . 20-3
- Model F-302 & F-3021 - Dry Pipe Valve Replacement Parts (2002) . . . 20-3
- Model A-2, - Dry Pipe Valve Replacement Parts (1999) . . . 20-3
- Model A-4, - Valve Replacement Parts . . . 20-3
- Model B Deluge Valve (2004) . . . 20-4
- Model DV-1 Deluge Valves (2007) . . . 20-4
- Model A-1 Dry Pipe Valves - (2002) . . . 20-4
- Model “A-1” Preaction Valve - (2003) . . . 20-4

General Air Products (2022) . . . 20-4

Discontinued Sprinkler Accessories
- CC1, Combustible Concealed Space Upright Sprinklers, K=2.8, ½" NPT . . . 20-5

## Section 21 - Electrical

Potter Electrical
- Waterflow Switches . . . 21-1
- Auto Test Switches and Accessories . . . 21-1
- Tamper Switches - OS&Y . . . 21-1
- Tamper Switches - Butterfly/PIV . . . 21-1
- Pressure Switches . . . 21-1
- Explosion Proof Switches . . . 21-1
- Electric Bells . . . 21-1
- Weatherproof Back Box . . . 21-1
- Release Panel . . . 21-1
- Batteries & Accessories for Release Panel . . . 21-1
- Heat Detectors . . . 21-1

Solenoid Valves - Ordinary Location . . . 21-2

Solenoid Valves - Hazardous Location . . . 21-2

Horn Strobes . . . 21-2

General Air Products
- Air Compressors . . . 21-2
- Oil-Less Air Compressors . . . 21-2, 21-3
- Magnetic Line Starter . . . 21-3
- Riser Mount Kits - Universal Bracket . . . 21-3
- Dry Air Pacs . . . 21-3
- Accessories . . . 21-3

Thermocable LHD Fire Sprinkler Systems Products
- Thermocable LHD - Linear Heat Detection Wire, PVC Jacket (Vinyl) . . . 21-4
- Mounting Clips and Clamps, Temperatures -40°F to 185°F . . . 21-4
- Cable Connecting Accessories . . . 21-4
- Cable Splicing Accessories . . . 21-4

## Section 22 - Corrosion Solutions

Nitrogen Generators - Includes Generator Cabinet and Integral Compressor . . . 22-1
Nitrogen Generators - Generator Cabinet and Compressor Sold Separately . . . 22-1
Oxygen Removal Vents - Dry/Preaction Systems . . . 22-2
Monitoring - Nitrogen/Oxygen Concentration . . . 22-2
Model TVC-2 and TVC-6 Advanced Vent Controllers . . . 22-2
Model TILD - Monitoring – TYCO In-Line Corrosion Detector . . . 22-3
Wet Pipe Air Venting / Wet Pipe Nitrogen Inerting (WPNI) . . . 22-4
Dry Pipe Nitrogen Inerting . . . 22-4

## Section C - Valves and Hose Equipment

Babbitt Valve Chainwheels
- Cast Iron Standard Chainwheel . . . C-1
- Hot Dipped Galvanized Standard Chain . . . C-1

United Brass Bronze Valves
- Globe Valves . . . C-1
- Swing Checks . . . C-1
- Ball Valves . . . C-1
- Angle Valves . . . C-1
- OS&Y Valves . . . C-1

Lansdale Powerball 300 Valves
- Slow Close Valve with Integral Tamper Switch . . . C-2

Trim Valves
- Test Valves . . . C-2
- Globe Valves . . . C-2
- Swing Checks . . . C-2
- Ball Valves . . . C-2
- Angle Valves . . . C-2

Hose Valves & FDC's
- Hose Valves . . . C-3
- STORZ Equipment . . . C-3
- Fire Department Connections . . . C-3

Croker Standpipe and Hose Equipment
- Hose Valve . . . C-3
- Hose Rack Units . . . C-3
- Fire Department Inlet Connections . . . C-3
- SIAM . . . C-3

AGF's . . . C-4

Guardian Standpipe and Hose Equipment
- Hose Valves . . . C-4
- Fire Department Inlet Connections . . . C-4

Misc. . . . C-4
- Expansion Tanks . . . C-4

## Section "D" Backflow

Ames
- Model Maxim M200 With FxG OS&Y Valve or Grooved Butterfly Valve . . . D-1
- Model Maxim M500 RPDA With FxG OS&Y Valve (GPM or CFM Meter) . . . D-1
- Model 2000B Brass Double Check Assembly with Ball Valve or Gear Operator . . . D-1
- Model 4000B Brass Reduced Pressure Backflow Assembly . . . D-1
- Model 2000 SS Double Check Backflow Assembly . . . D-1
- Model 3000 SS Double Check Detector Backflow Assembly . . . D-1
- Model 4000 SS Reduced Pressure Backflow Prevention Assembly . . . D-1
- Maxim/Colt Air Gap Drains . . . D-1
- Model C200 Double Check Assembly . . . D-1
- Model C300 Double Check Detector Assembly . . . D-1
- Model C400 Reduced Pressure Assembly . . . D-1
- Model C500 Reduced Pressure Detector Assembly . . . D-1

Wilkins
- Model 350ADA Double Check Detector . . . D-1
- Model 375 or 375ADA Reduced Pressure Principle . . . D-1
- Air Gap Drains . . . D-1

Watts Regulator
- Model 007 QT Double Check Backflow . . . D-1
- Pressure Relief Valve . . . D-1

## Section "F" Pipe & Accessories

SCI Coop-Let - F.T. & Grooved . . . F–1

Merit
- Grooved Outlets . . . F–2

Test/Drain Assemblies . . . F–2
Tee-Let Welded Outlet Fittings - Grooved . . . F–2
Sight Drains . . . F–2
Fig. 71 Flange Adapter - Bolt, Nut, Gasket Kits . . . F–2
Split Rings Plastic Floor and Ceiling Plates . . . F–2
Misc . . . F–3
Drop-In Anchor and Setting Tools . . . F–3
Wall Plates . . . F–3

Flanged Fittings
- Cast Iron Companion Flange . . . F–3

Ductile Iron Fittings
- Elbows . . . F–3
- Tees . . . F–3, F–4
- Couplings . . . F–4
- Caps . . . F–4
- Crosses . . . F–4
- Plugs . . . F–4
- Extension Pieces . . . F–4
- Hex Bushings . . . F–5
- Unions . . . F–5
- California Fittings . . . F–5
- Male Street Elbow . . . F–5

Standard Black Nipple . . . F–5
Galvanized Nipple . . . F–5

## Section "J" Lubricants

LA-CO Industries
- Thread Sealant Paste . . . . . J–1
- Gasket Lubricant . . . . . J–1
- Pipe Markers (Valve Action) . . . . . J–1

Teflon Pipe Tape . . . . . J–1
PE Permabond . . . . . J–1
PipeFit Anaerobic Sealant . . . . . J–1
Adhesive . . . . . J–1
Thread Sealant . . . . . J–1
Gasket Lubricant . . . . . J–1

## Section "K" Misc.

MIFAB / PMR
- Drywall Access Doors . . . . . K–1
- Metal Model CAD-FL-PK . . . . . K–1
- Metal Model CAD-FL . . . . . K–1

Acudor Products
- Access Door, Flush, Prime coated steel, UF5000 . . . . . K–1

## Model TY-L, K=5.6, 1/2" NPT, Pendent, Recessed Pendent and Upright

100 Box Quantity (Upright 21.5 lbs/box (SIN TY3111), Pendent 19 lbs/box (SIN TY3211))

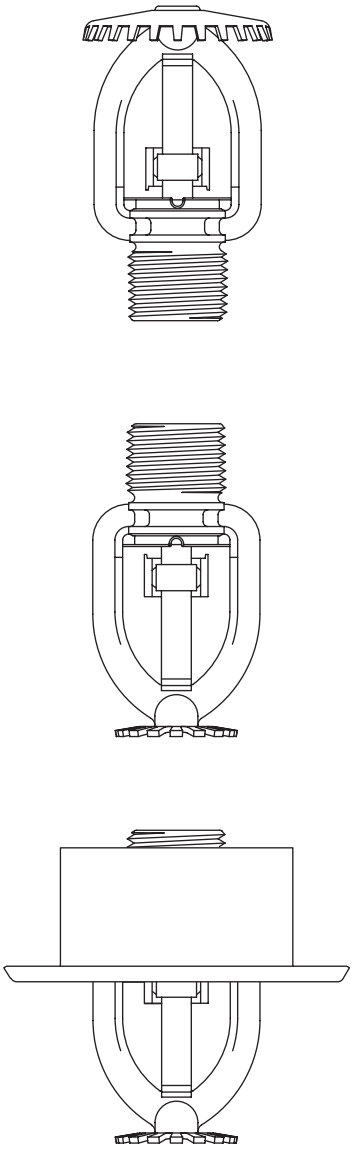

| C.O. | Upright | Pendent | Finish | Temperature | List Price |
|---|---|---|---|---|---|
| | **53-111-1-165** | **53-112-1-165** | Brass | 165°F (74°C) | $61.61 |
| | **53-111-1-212** | **53-112-1-212** | Brass | 212°F (100°C) | $61.61 |
| | **53-111-1-280** | **53-112-1-280** | Brass | 280°F (138°C) | $61.61 |
| | **53-111-9-165** | **53-112-9-165** | Chrome | 165°F (74°C) | $74.52 |
| ◗ | **53-111-9-212** | **53-112-9-212** | Chrome | 212°F (100°C) | $74.52 |
| ◗ | **53-111-9-280** | **53-112-9-280** | Chrome | 280°F (138°C) | $74.52 |
| ◗ | **53-111-6-165** | **53-112-6-165** | Wax Coated | 165°F (74°C) | $141.98 |
| ◗ | **53-111-6-212** | **53-112-6-212** | Wax Coated | 212°F (100°C) | $141.98 |
| | **Recessed Escutcheons (Order Separately)** | | | | |
| | **56-705-2-010** | 1/2" Brass Plated (Style 20) | | | $22.65 |
| | **56-705-9-010** | 1/2" Chrome Plated (Style 20) | | | $6.30 |
| | **56-705-4-010** | 1/2" Signal White (RAL 9003) (Style 20) | | | $6.30 |
| | **Sprinkler Wrench** | | | | |
| | **56-000-1-849** | W-Type 9 Wrench | | | $230.03 |
| | **56-000-1-948** | W-Type 10 Wrench (Recessed Only) | | | $330.58 |

**Technical Data Sheet: TFP110**



*See latest Technical Data Sheets for specific Approvals, Listings, Design Parameters & available finishes. Sprinkler heads & escutcheons are priced separately unless otherwise noted.*

*Items marked **"C.O."** are made to order and may require longer delivery times. Please contact customer service for availability.*

Section 1 Standard Spray Sprinklers
Section 2 Extended Coverage Sprinklers
Section 3 Storage Sprinklers
Section 4 Residential Products
Section 5 Dry Sprinklers
Section 6 Special Sprinklers
Section 7 Nozzles and Sprinkler Accessories

## Model TY-L, K=8.0, 3/4" Male NPT, Upright Sprinklers

100 Box Quantity (Upright 21.5 lbs/box (SIN TY4111))

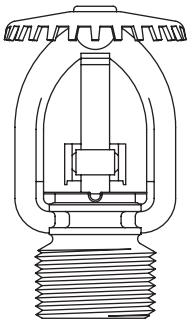

| C.O. | Upright | Finish | Temperature | List Price |
|---|---|---|---|---|
| | 53-101-1-165 | Brass | 165°F (74°C) | $111.05 |
| ◗ | 53-101-1-212 | Brass | 212°F (100°C) | $111.05 |
| | 53-101-1-280 | Brass | 280°F (138°C) | $111.05 |
| | **Sprinkler Wrench** | | | |
| | 56-000-1-849 | W-Type 9 Wrench | | $230.03 |

**Technical Data Sheet: TFP110**

## Model TY-L, K=8.0, 1/2" Male NPT, Upright Sprinklers

100 Box Quantity (Upright 21.5 lbs/box (SIN TY4811))

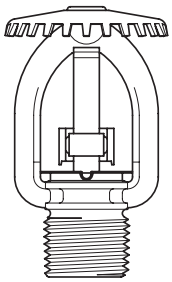

| C.O. | Upright | Finish | Temperature | List Price |
|---|---|---|---|---|
| | 53-106-1-165 | Brass | 165°F (74°C) | $140.65 |
| ◗ | 53-106-1-212 | Brass | 212°F (100°C) | $140.65 |
| | 53-106-1-280 | Brass | 280°F (138°C) | $140.65 |
| | **Sprinkler Wrench** | | | |
| | 56-000-1-849 | W-Type 9 Wrench | | $230.03 |

**Technical Data Sheet: TFP110**

## Model TY-L, K=5.6, 1/2" NPT, Horizontal Sidewall Sprinkler

100 Box Quantity (19 lbs/box) (SIN TY3311)

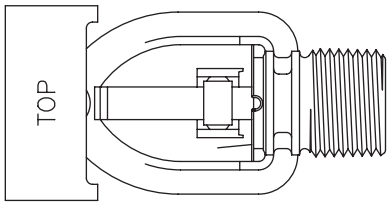


| C.O. | Horiz. Sidewall | Finish | Temperature | List Price |
|---|---|---|---|---|
| | 53-113-1-165 | Brass | 165°F (74°C) | $120.91 |
| ◗ | 53-113-1-212 | Brass | 212°F (100°C) | $120.91 |
| | 53-113-1-280 | Brass | 280°F (138°C) | $120.91 |
| | 53-113-9-165 | Chrome | 165°F (74°C) | $129.53 |
| ◗ | 53-113-9-212 | Chrome | 212°F (100°C) | $129.53 |
| | 53-113-9-280 | Chrome | 280°F (138°C) | $129.53 |
| | **Sprinkler Wrench** | | | |
| | 56-000-1-849 | W-Type 9 Wrench | | $230.03 |

**Technical Data Sheet: TFP120**

*Items marked **"C.O."** are made to order and may require longer delivery times. Please contact customer service for availability.*

*See latest Technical Data Sheets for specific Approvals, Listings, Design Parameters & available finishes. Sprinkler heads & escutcheons are priced separately unless otherwise noted.*

## Model TY-FRL, K=5.6, 1/2" NPT, Quick Response Sprinkler

100 Box Quantity (Upright 20 lbs/box (SIN TY3121), Pendent 18.5 lbs/box (SIN TY3221))

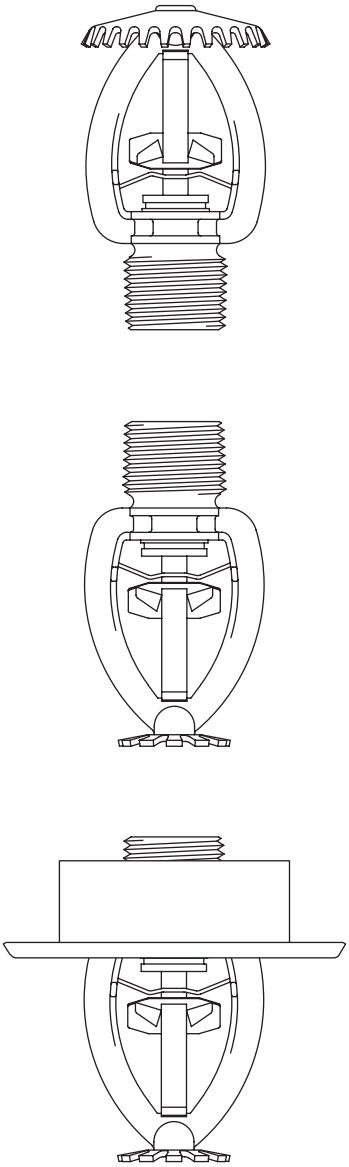

| C.O. | Upright þþ | Pendent | Description | Temperature | List Price |
|---|---|---|---|---|---|
| | **58-974-1-165** | **58-982-1-165** | Natural Brass | 165°F (74°C) | $160.77 |
| | **58-974-1-212** | **58-982-1-212** | Natural Brass | 212°F (100°C) | $160.77 |
| | **58-974-9-165** | **58-982-9-165** | Chrome Plated | 165°F (74°C) | $191.10 |
| | **58-974-9-212** | **58-982-9-212** | Chrome Plated | 212°F (100°C) | $191.10 |
| | **Recessed Escutcheons (Order Separately)** | | | | |
| | **56-705-2-010** | 1/2" Brass Plated (Style 20) | | | $22.65 |
| | **56-705-9-010** | 1/2" Chrome Plated (Style 20) | | | $6.30 |
| | **56-705-4-010** | 1/2" Signal White (RAL 9003) (Style 20) | | | $6.30 |
| | **Sprinkler Wrench** | | | | |
| | **56-000-1-849** | W-Type 9 Wrench | | | $230.03 |
| | **56-798-1-001** | W-Type 12 (Recessed Only) | | | $330.60 |

**Technical Data Sheet: TFP130**



*See latest Technical Data Sheets for specific Approvals, Listings, Design Parameters & available finishes. Sprinkler heads & escutcheons are priced separately unless otherwise noted.*

*Items marked **"C.O."** are made to order and may require longer delivery times. Please contact customer service for availability.*

Section 1 Standard Spray Sprinklers
Section 2 Extended Coverage Sprinklers
Section 3 Storage Sprinklers
Section 4 Residential Products
Section 5 Dry Sprinklers
Section 6 Special Sprinklers
Section 7 Nozzles and Sprinkler Accessories

## Model TY-FRL, K=8.0, 3/4" NPT, Quick Response Sprinkler

100 Box Quantity (Upright 25 lbs/box (SIN TY4121), Pendent 25 lbs/box (SIN TY4221))

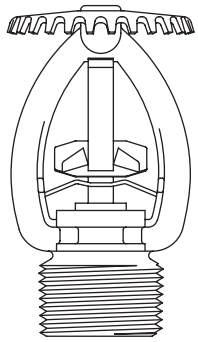

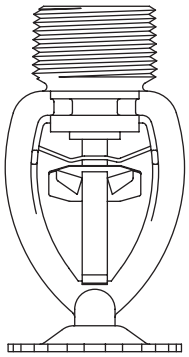

| C.O. | Upright | Pendent | Description | Temperature | List Price |
|---|---|---|---|---|---|
| | **58-174-1-165** | **58-172-1-165** | Natural Brass | 165°F (74°C) | $192.96 |
| | **58-174-1-212** | **58-172-1-212** | Natural Brass | 212°F (100°C) | $192.96 |
| | **58-174-9-165** | **58-172-9-165** | Chrome Plated | 165°F (74°C) | $273.60 |
| | **--** | **58-172-9-212** | Chrome Plated | 212°F (100°C) | $273.60 |
| **Sprinkler Wrench** | | | | | |
| | **56-000-1-849** | W-Type 9 Wrench | | | $230.03 |

**Technical Data Sheet: TFP130**

*Items marked **"C.O."** are made to order and may require longer delivery times. Please contact customer service for availability.*

*See latest Technical Data Sheets for specific Approvals, Listings, Design Parameters & available finishes. Sprinkler heads & escutcheons are priced separately unless otherwise noted.*

## TY-B, 5mm Bulb, K=5.6, 1/2" NPT Pendent, Recessed Pendent and Upright

100 Box Quantity (Upright 18 lbs/box (SIN TY315), Pendent 17 lbs/box (SIN TY325))

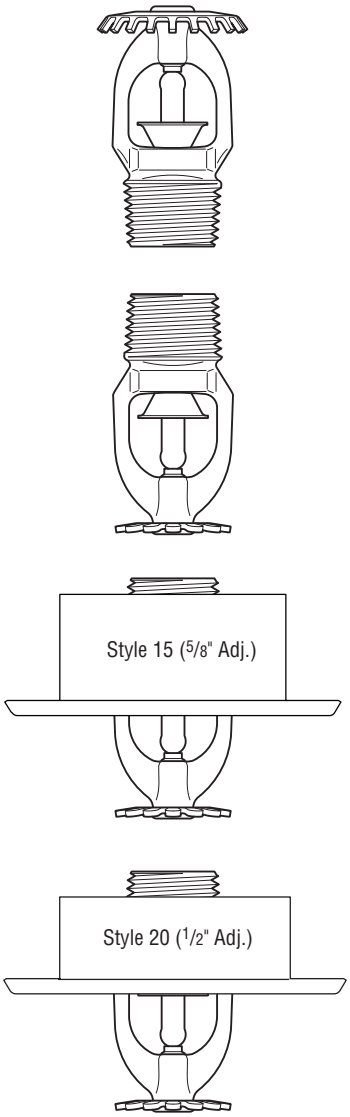


| C.O. | Upright | Pendent | Finish | Temperature | List Price |
|---|---|---|---|---|---|
| ◗ | 77-570-1-135 | 77-571-1-135 | Natural Brass | 135°F (57°C) | $23.69 |
| | 77-570-1-155 | 77-571-1-155 | Natural Brass | 155°F (68°C) | $23.69 |
| ◗ | 77-570-1-175 | 77-571-1-175 | Natural Brass | 175°F (79°C) | $23.69 |
| | 77-570-1-200 | 77-571-1-200 | Natural Brass | 200°F (93°C) | $23.69 |
| | 77-570-1-286 | 77-571-1-286 | Natural Brass | 286°F (141°C) | $23.69 |
| | 77-570-1-360 | 77-571-1-360 | Natural Brass | 360°F (182°C) | $33.98 |
| ◗ | 77-570-9-135 | – | Chrome Plated | 135°F (57°C) | $43.90 |
| ◗ | – | 77-571-9-135 | Chrome Plated | 135°F (57°C) | $25.00 |
| | 77-570-9-155 | – | Chrome Plated | 155°F (68°C) | $43.90 |
| | – | 77-571-9-155 | Chrome Plated | 155°F (68°C) | $25.00 |
| ◗ | 77-570-9-175 | – | Chrome Plated | 175°F (79°C) | $43.90 |
| ◗ | – | 77-571-9-175 | Chrome Plated | 175°F (79°C) | $25.00 |
| ◗ | 77-570-9-200 | – | Chrome Plated | 200°F (93°C) | $43.90 |
| ◗ | – | 77-571-9-200 | Chrome Plated | 200°F (93°C) | $25.00 |
| ◗ | 77-570-9-286 | – | Chrome Plated | 286°F (141°C) | $43.90 |
| ◗ | – | 77-571-9-286 | Chrome Plated | 286°F (141°C) | $25.00 |
| ◗ | 77-570-9-360 | – | Chrome Plated | 360°F (182°C) | POA |
| ◗ | – | 77-571-9-360 | Chrome Plated | 360°F (182°C) | $87.37 |
| ◗ | 77-570-4-135 | – | Signal White (RAL 9003) | 135°F (57°C) | $43.90 |
| ◗ | – | 77-571-4-135 | Signal White (RAL 9003) | 135°F (57°C) | $25.00 |
| | 77-570-4-155 | – | Signal White (RAL 9003) | 155°F (68°C) | $43.90 |
| | – | 77-571-4-155 | Signal White (RAL 9003) | 155°F (68°C) | $25.00 |
| ◗ | 77-570-4-175 | – | Signal White (RAL 9003) | 175°F (79°C) | $43.90 |
| ◗ | – | 77-571-4-175 | Signal White (RAL 9003) | 175°F (79°C) | $25.00 |
| | 77-570-4-200 | – | Signal White (RAL 9003) | 200°F (93°C) | $43.90 |
| | – | 77-571-4-200 | Signal White (RAL 9003) | 200°F (93°C) | $25.00 |
| ◗ | 77-570-4-286 | – | Signal White (RAL 9003) | 286°F (141°C) | $43.90 |
| ◗ | – | 77-571-4-286 | Signal White (RAL 9003) | 286°F (141°C) | $25.00 |
| ◗ | 77-570-4-360 | – | Signal White (RAL 9003) | 360°F (182°C) | $86.41 |
| ◗ | – | 77-571-4-360 | Signal White (RAL 9003) | 360°F (182°C) | $87.90 |
| ◗ | 77-570-5-135 | 77-571-5-135 | Jet Black (RAL 9005) | 135°F (57°C) | $61.08 |
| ◗ | 77-570-5-155 | 77-571-5-155 | Jet Black (RAL 9005) | 155°F (68°C) | $61.08 |
| ◗ | 77-570-5-175 | 77-571-5-175 | Jet Black (RAL 9005) | 175°F (79°C) | $61.08 |
| ◗ | 77-570-5-200 | 77-571-5-200 | Jet Black (RAL 9005) | 200°F (93°C) | $61.08 |
| ◗ | 77-570-5-286 | -- | Jet Black (RAL 9005) | 286°F (141°C) | $61.08 |

**Escutcheons & Sprinkler Wrenchs on next page**



*See latest Technical Data Sheets for specific Approvals, Listings, Design Parameters & available finishes. Sprinkler heads & escutcheons are priced separately unless otherwise noted.*

*Items marked **"C.O."** are made to order and may require longer delivery times. Please contact customer service for availability.*

## TY-B, 5mm Bulb, K=5.6, 1/2" NPT Pendent, Recessed Pendent and Upright

100 Box Quantity (Upright 18 lbs/box (SIN TY315), Pendent 17 lbs/box (SIN TY325))

| C.O. | Upright | Pendent | Finish | Temperature | List Price |
|---|---|---|---|---|---|
| | | **Recessed Escutcheons (Order Separately)** | | | |
| | **56-715-2-010** | 1/2" Brass Plated (Style 15) | | | $22.65 |
| | **56-715-9-010** | 1/2" Chrome Plated (Style 15) | | | $5.40 |
| | **56-715-4-010** | 1/2" Signal White (RAL 9003) (Style 15) | | | $5.40 |
| | **56-715-6-010** | 1/2" Jet Black (RAL 9005)(Style 15) | | | $19.63 |
| | **56-705-2-010** | 1/2" Brass (Style 20) | | | $22.65 |
| | **56-705-9-010** | 1/2" Chrome (Style 20) | | | $6.30 |
| | **56-705-4-010** | 1/2" Signal White (RAL 9003) (Style 20) | | | $6.30 |
| | **56-705-6-010** | 1/2" Jet Black (RAL 9005) (Style 20) | | | $19.63 |
| | | **Sprinkler Wrench** | | | |
| | **56-000-6-387** | W-Type 6 Wrench | | | $252.89 |
| | **56-850-4-001** | W-Type 7 Wrench (Recessed Only) | | | $427.09 |
| | | **Technical Data Sheet: TFP152** | | | |

*Items marked **"C.O."** are made to order and may require longer delivery times. Please contact customer service for availability.*

*See latest Technical Data Sheets for specific Approvals, Listings, Design Parameters & available finishes. Sprinkler heads & escutcheons are priced separately unless otherwise noted.*

## TY-B, 5mm Bulb, K=8.0, 1/2" NPT, Pendent and Upright Sprinklers,

100 Box Quantity (Upright 21 lbs/box (SIN TY4851), Pendent 21 lbs/box (SIN TY4951))

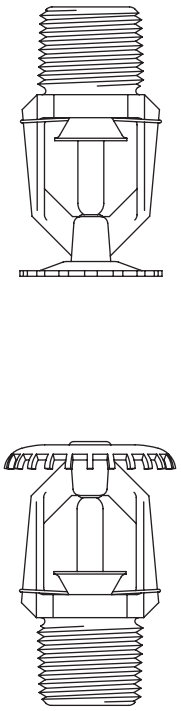

| C.O. | Upright | Pendent | Finish | Temperature | List Price |
|---|---|---|---|---|---|
| ◗ | 57-560-1-135 | – | Brass | 135°F (57°C) | $98.95 |
| ◗ | – | 57-561-1-135 | Brass | 135°F (57°C) | $79.16 |
| | 57-560-1-155 | 57-561-1-155 | Brass | 155°F (68°C) | $65.97 |
| ◗ | 57-560-1-175 | – | Brass | 175°F (79°C) | $65.97 |
| ◗ | – | 57-561-1-175 | Brass | 175°F (79°C) | $79.16 |
| | 57-560-1-200 | 57-561-1-200 | Brass | 200°F (93°C) | $65.97 |
| ◗ | 57-560-1-286 | 57-561-1-286 | Brass | 286°F (141°C) | $65.97 |
| ◗ | 57-560-1-360 | 57-561-1-360 | Brass | 360°F (182°C) | $74.89 |
| ◗ | 57-560-9-135 | 57-561-9-135 | Chrome | 135°F (57°C) | $74.89 |
| | 57-560-9-155 | 57-561-9-155 | Chrome | 155°F (68°C) | $74.89 |
| ◗ | 57-560-9-175 | 57-561-9-175 | Chrome | 175°F (79°C) | $74.89 |
| ◗ | 57-560-9-200 | 57-561-9-200 | Chrome | 200°F (93°C) | $74.89 |
| ◗ | 57-560-9-286 | 57-561-9-286 | Chrome | 286°F (141°C) | $74.89 |
| ◗ | 57-560-9-360 | 57-561-9-360 | Chrome | 360°F (182°C) | $82.87 |
| ◗ | 57-560-4-135 | 57-561-4-135 | Signal White (RAL 9003) | 135°F (57°C) | $56.03 |
| | 57-560-4-155 | 57-561-4-155 | Signal White (RAL 9003) | 155°F (68°C) | $56.03 |
| ◗ | 57-560-4-175 | 57-561-4-175 | Signal White (RAL 9003) | 175°F (79°C) | $56.03 |
| ◗ | 57-560-4-200 | 57-561-4-200 | Signal White (RAL 9003) | 200°F (93°C) | $56.03 |
| ◗ | 57-560-4-286 | 57-561-4-286 | Signal White (RAL 9003) | 286°F (141°C) | $56.03 |
| ◗ | 57-560-4-360 | 57-561-4-360 | Signal White (RAL 9003) | 360°F (182°C) | $82.58 |
| **Sprinkler Wrench** | | | | | |
| | 56-000-6-387 | W-Type 6 Wrench | | | $252.89 |
| **Technical Data Sheet: TFP151** | | | | | |



*See latest Technical Data Sheets for specific Approvals, Listings, Design Parameters & available finishes. Sprinkler heads & escutcheons are priced separately unless otherwise noted.*

*Items marked **"C.O."** are made to order and may require longer delivery times. Please contact customer service for availability.*

Section 1 Standard Spray Sprinklers
Section 2 Extended Coverage Sprinklers
Section 3 Storage Sprinklers
Section 4 Residential Products
Section 5 Dry Sprinklers
Section 6 Special Sprinklers
Section 7 Nozzles and Sprinkler Accessories

## TY-B, *5mm* Bulb, K=8.0, 3/4" NPT, Pendent, Recessed Pendent and Upright Sprinklers

100 Box Quantity (Upright 21 lbs/box (SIN TY4151), Pendent 21 lbs/box (SIN TY4251))

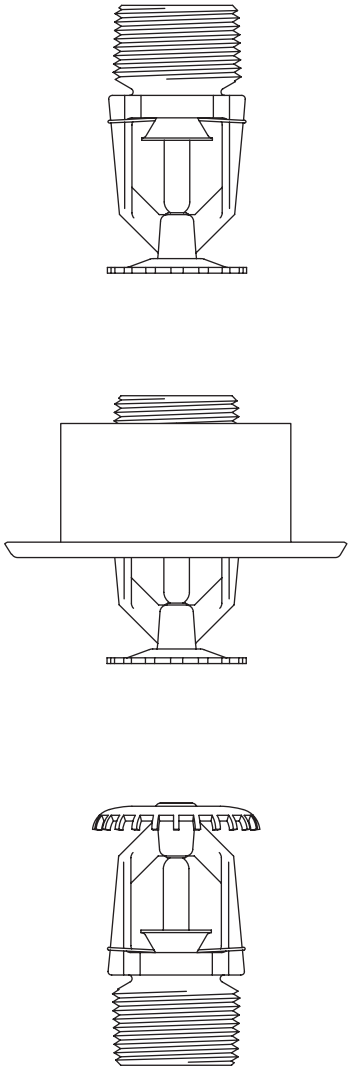

| C.O. | Upright | Pendent | Finish | Temperature | List Price |
|---|---|---|---|---|---|
| ◗ | **57-590-1-135** | **57-591-1-135** | Brass | 135°F (57°C) | $28.10 |
| | **57-590-1-155** | **57-591-1-155** | Brass | 155°F (68°C) | $28.10 |
| ◗ | **57-590-1-175** | **57-591-1-175** | Brass | 175°F (79°C) | $28.10 |
| | **57-590-1-200** | **57-591-1-200** | Brass | 200°F (93°C) | $28.10 |
| | **57-590-1-286** | **57-591-1-286** | Brass | 286°F (141°C) | $28.10 |
| ◗ | **57-590-1-360** | **57-591-1-360** | Brass | 360°F (182°C) | $54.11 |
| ◗ | **57-590-9-135** | **–** | Chrome | 135°F (57°C) | $54.11 |
| ◗ | **–** | **57-591-9-135** | Chrome | 135°F (57°C) | $28.10 |
| | **57-590-9-155** | **–** | Chrome | 155°F (68°C) | $54.11 |
| | **–** | **57-591-9-155** | Chrome | 155°F (68°C) | $28.10 |
| ◗ | **57-590-9-175** | **–** | Chrome | 175°F (79°C) | $54.11 |
| ◗ | **–** | **57-591-9-175** | Chrome | 175°F (79°C) | $28.10 |
| ◗ | **57-590-9-200** | **–** | Chrome | 200°F (93°C) | $54.11 |
| ◗ | **–** | **57-591-9-200** | Chrome | 200°F (93°C) | $28.10 |
| ◗ | **57-590-9-286** | **–** | Chrome | 286°F (141°C) | $54.11 |
| ◗ | **–** | **57-591-9-286** | Chrome | 286°F (141°C) | $28.10 |
| ◗ | **57-590-9-360** | **57-591-9-360** | Chrome | 360°F (182°C) | $54.11 |
| ◗ | **57-590-4-135** | **–** | Signal White (RAL 9003) | 135°F (57°C) | $54.11 |
| ◗ | **–** | **57-591-4-135** | Signal White (RAL 9003) | 135°F (57°C) | $28.10 |
| | **57-590-4-155** | **–** | Signal White (RAL 9003) | 155°F (68°C) | $54.11 |
| | **–** | **57-591-4-155** | Signal White (RAL 9003) | 155°F (68°C) | $28.10 |
| ◗ | **57-590-4-175** | **–** | Signal White (RAL 9003) | 175°F (79°C) | $54.11 |
| ◗ | **–** | **57-591-4-175** | Signal White (RAL 9003) | 175°F (79°C) | $28.10 |
| ◗ | **57-590-4-200** | **–** | Signal White (RAL 9003) | 200°F (93°C) | $54.11 |
| ◗ | **–** | **57-591-4-200** | Signal White (RAL 9003) | 200°F (93°C) | $28.10 |
| ◗ | **57-590-4-286** | **–** | Signal White (RAL 9003) | 286°F (141°C) | $54.11 |
| ◗ | **–** | **57-591-4-286** | Signal White (RAL 9003) | 286°F (141°C) | $28.10 |
| ◗ | **57-590-4-360** | **–** | Signal White (RAL 9003) | 360°F (182°C) | $71.50 |
| ◗ | **–** | **57-591-4-360** | Signal White (RAL 9003) | 360°F (182°C) | $54.11 |
| ◗ | **57-590-6-155** | **57-591-6-155** | Wax Coated | 155°F (68°C) | $124.99 |
| ◗ | **57-590-6-175** | **57-591-6-175** | Wax Coated | 175°F (79°C) | $124.99 |
| ◗ | **57-590-6-200** | **57-591-6-200** | Wax Coated | 200°F (93°C) | $124.99 |
| ◗ | **57-590-6-286** | **57-591-6-286** | Wax Coated | 286°F (141°C) | $124.99 |
| | **Recessed Escutcheons (Order Separately)** | | | | |
| | **56-700-2-010** | 3/4" Brass Recessed (Style 40) | | | $22.65 |
| | **56-700-9-010** | 3/4" Chrome Recessed (Style 40) | | | $8.47 |
| | **56-700-4-010** | 3/4" Signal White (RAL 9003) Recessed (Style 40) | | | $8.47 |
| | **56-700-6-010** | 3/4" Jet Black (RAL 9005) Recessed (Style 40) | | | $20.98 |
| | **Sprinkler Wrench** | | | | |
| | **56-000-6-387** | W-Type 6 Wrench | | | $252.89 |
| | **56-850-4-001** | W-Type 7 Wrench (Recessed Only) | | | $427.09 |
| | **Technical Data Sheet: TFP151** | | | | |

*Items marked **"C.O."** are made to order and may require longer delivery times. Please contact customer service for availability.*

*See latest Technical Data Sheets for specific Approvals, Listings, Design Parameters & available finishes. Sprinkler heads & escutcheons are priced separately unless otherwise noted.*

## TY-B, 5mm Bulb, K=5.6, 1/2" NPT, Horizontal, Recessed Horizontal, and Vertical Sidewall Sprinklers

100 Box Quantity (HSW 18 lbs/box (SIN TY3351), VSW 18 lbs/box (SIN TY3451))

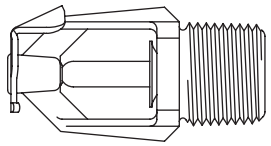

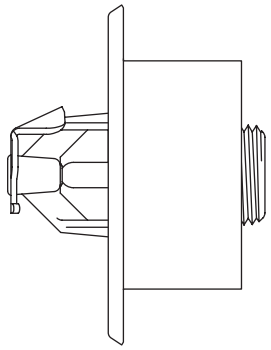

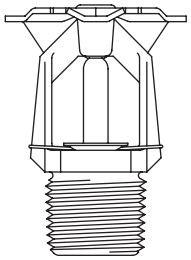

| C.O. | Horiz. Sidewall | Vertical | Finish | Temperature | List Price |
|---|---|---|---|---|---|
| ◗ | **57-578-1-135** | – | Brass | 135°F (57°C) | $41.13 |
| ◗ | – | **57-575-1-135** | Brass | 135°F (57°C) | $84.24 |
| | **57-578-1-155** | – | Brass | 155°F (68°C) | $41.13 |
| | – | **57-575-1-155** | Brass | 155°F (68°C) | $84.24 |
| ◗ | **57-578-1-175** | – | Brass | 175°F (79°C) | $41.13 |
| ◗ | – | **57-575-1-175** | Brass | 175°F (79°C) | $84.24 |
| | **57-578-1-200** | – | Brass | 200°F (93°C) | $41.13 |
| | – | **57-575-1-200** | Brass | 200°F (93°C) | $84.24 |
| | **57-578-1-286** | – | Brass | 286°F (141°C) | $41.13 |
| | – | **57-575-1-286** | Brass | 286°F (141°C) | $84.24 |
| ◗ | **57-578-1-360** | – | Brass | 360°F (182°C) | $41.13 |
| ◗ | – | **57-575-1-360** | Brass | 360°F (182°C) | $102.94 |
| ◗ | **57-578-9-135** | – | Chrome | 135°F (57°C) | $41.13 |
| ◗ | – | **57-575-9-135** | Chrome | 135°F (57°C) | $94.90 |
| | **57-578-9-155** | – | Chrome | 155°F (68°C) | $41.13 |
| | – | **57-575-9-155** | Chrome | 155°F (68°C) | $94.90 |
| ◗ | **57-578-9-175** | – | Chrome | 175°F (79°C) | $41.13 |
| | **57-578-9-200** | – | Chrome | 200°F (93°C) | $41.13 |
| | – | **57-575-9-200** | Chrome | 200°F (93°C) | $94.90 |
| ◗ | **57-578-9-286** | – | Chrome | 286°F (141°C) | $41.13 |
| ◗ | – | **57-575-9-286** | Chrome | 286°F (141°C) | $94.90 |
| ◗ | **57-578-9-360** | – | Chrome | 360°F (182°C) | $41.13 |
| ◗ | – | **57-575-9-360** | Chrome | 360°F (182°C) | $114.50 |
| ◗ | **57-578-4-135** | – | Signal White (RAL 9003) | 135°F (57°C) | $41.13 |
| ◗ | – | **57-575-4-135** | Signal White (RAL 9003) | 135°F (57°C) | $93.90 |
| | **57-578-4-155** | – | Signal White (RAL 9003) | 155°F (68°C) | $41.13 |
| | – | **57-575-4-155** | Signal White (RAL 9003) | 155°F (68°C) | $93.90 |
| ◗ | **57-578-4-175** | – | Signal White (RAL 9003) | 175°F (79°C) | $41.13 |
| ◗ | – | **57-575-4-175** | Signal White (RAL 9003) | 175°F (79°C) | $93.90 |
| ◗ | **57-578-4-200** | – | Signal White (RAL 9003) | 200°F (93°C) | $41.13 |
| ◗ | – | **57-575-4-200** | Signal White (RAL 9003) | 200°F (93°C) | $93.90 |
| ◗ | **57-578-4-286** | – | Signal White (RAL 9003) | 286°F (141°C) | $41.13 |
| ◗ | – | **57-575-4-286** | Signal White (RAL 9003) | 286°F (141°C) | $93.90 |
| ◗ | -- | **57-575-4-360** | Signal White (RAL 9003) | 360°F (182°C) | $113.29 |
| | **Recessed Escutcheons (Order Separately)** | | | | |
| | **56-701-2-010** | 1/2" Brass Plated (Style 10) | | | $22.65 |
| | **56-701-9-010** | 1/2" Chrome Plated (Style 10) | | | $7.26 |
| | **56-701-4-010** | 1/2" Signal White (RAL 9003) (Style 10) | | | $7.26 |
| | **56-701-6-010** | 1/2" Jet Black (RAL 9005) (Style 10) | | | $19.63 |
| | **Sprinkler Wrench** | | | | |
| | **56-000-6-387** | W-Type 6 Wrench | | | $252.89 |
| | **56-850-4-001** | W-Type 7 Wrench (Recessed Only) | | | $427.09 |
| | **Technical Data Sheet: TFP161** | | | | |



*See latest Technical Data Sheets for specific Approvals, Listings, Design Parameters & available finishes. Sprinkler heads & escutcheons are priced separately unless otherwise noted.*

*Items marked **"C.O."** are made to order and may require longer delivery times. Please contact customer service for availability.*

Section 1 Standard Spray Sprinklers
Section 2 Extended Coverage Sprinklers
Section 3 Storage Sprinklers
Section 4 Residential Products
Section 5 Dry Sprinklers
Section 6 Special Sprinklers
Section 7 Nozzles and Sprinkler Accessories

## TY-B, 5mm Bulb, K=5.6, 1/2" NPT Standard Response Upright Sprinklers Listed for Foam Applications

100 Box Quantity (Upright 18 lbs/box (SIN TY3151)

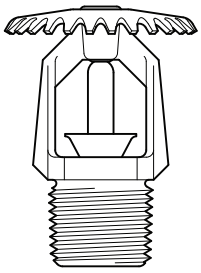

| C.O. | Upright | Finish | Temperature | List Price |
|---|---|---|---|---|
| ◗ | **57-570-1-135** | Natural Brass | 135°F (57°C) | $30.41 |
| | **57-570-1-155** | Natural Brass | 155°F (68°C) | $30.41 |
| ◗ | **57-570-1-175** | Natural Brass | 175°F (79°C) | $30.41 |
| | **57-570-1-200** | Natural Brass | 200°F (93°C) | $30.41 |
| | **57-570-1-286** | Natural Brass | 286°F (141°C) | $30.41 |
| | **57-570-1-360** | Natural Brass | 360°F (182°C) | $30.41 |
| **Sprinkler Wrench** | | | | |
| | **56-000-6-387** | W-Type 6 Wrench | | $252.89 |
| **Technical Data Sheet: TFP151** | | | | |

*Items marked **"C.O."** are made to order and may require longer delivery times. Please contact customer service for availability.*

*See latest Technical Data Sheets for specific Approvals, Listings, Design Parameters & available finishes. Sprinkler heads & escutcheons are priced separately unless otherwise noted.*

## TY-FRB, 3mm Bulb, Quick Response, K=4.2, 1/2" NPT, Pendent, Recessed Pendent and Upright Sprinklers

100 Box Quantity (Upright 18 lbs/box (SIN TY2131), Pendent 17 lbs/box (SIN TY2231))

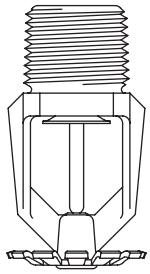

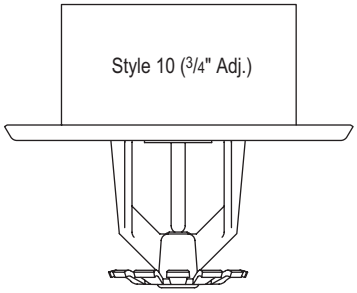


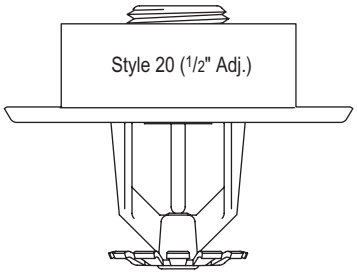


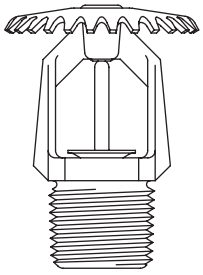

| C.O. | Upright | Pendent | Finish | Temperature | List Price |
|---|---|---|---|---|---|
| ◗ | **57-340-1-135** | – | Natural Brass | 135°F (57°C) | $57.89 |
| ◗ | – | **57-341-1-135** | Natural Brass | 135°F (57°C) | $69.47 |
| | **57-340-1-155** | **57-341-1-155** | Natural Brass | 155°F (68°C) | $57.89 |
| ◗ | **57-340-1-175** | **57-341-1-175** | Natural Brass | 175°F (79°C) | $57.89 |
| | **57-340-1-200** | **57-341-1-200** | Natural Brass | 200°F (93°C) | $57.89 |
| ◗ | **57-340-1-286** | -- | Natural Brass | 286°F (141°C) | $57.89 |
| ◗ | **57-340-9-135** | **57-341-9-135** | Chrome Plated | 135°F (57°C) | $82.68 |
| | **57-340-9-155** | **57-341-9-155** | Chrome Plated | 155°F (68°C) | $82.68 |
| ◗ | **57-340-9-175** | **57-341-9-175** | Chrome Plated | 175°F (79°C) | $82.68 |
| ◗ | **57-340-9-200** | **57-341-9-200** | Chrome Plated | 200°F (93°C) | $82.68 |
| ◗ | **57-340-9-286** | **57-341-9-286** | Chrome Plated | 286°F (141°C) | $82.68 |
| ◗ | **57-340-4-135** | **57-341-4-135** | Signal White (RAL 9003) | 135°F (57°C) | $82.68 |
| | **57-340-4-155** | **57-341-4-155** | Signal White (RAL 9003) | 155°F (68°C) | $82.68 |
| ◗ | **57-340-4-175** | **57-341-4-175** | Signal White (RAL 9003) | 175°F (79°C) | $82.68 |
| ◗ | **57-340-4-200** | **57-341-4-200** | Signal White (RAL 9003) | 200°F (93°C) | $82.68 |
| ◗ | **57-340-4-286** | **57-341-4-286** | Signal White (RAL 9003) | 286°F (141°C) | $82.68 |
| **Recessed Escutcheons (Order Separately)** | | | | | |
| | **56-701-2-010** | 1/2" Brass Plated (Style 10) | | | $22.65 |
| | **56-701-9-010** | 1/2" Chrome Plated (Style 10) | | | $7.26 |
| | **56-701-4-010** | 1/2" Signal White (RAL 9003) (Style 10) | | | $7.26 |
| | **56-701-6-010** | 1/2" Jet Black (RAL 9005) (Style 10) | | | $19.63 |
| | **56-705-2-010** | 1/2" Brass Plated (Style 20) | | | $22.65 |
| | **56-705-9-010** | 1/2" Chrome Plated (Style 20) | | | $6.30 |
| | **56-705-4-010** | 1/2" Signal White (RAL 9003) (Style 20) | | | $6.30 |
| | **56-705-6-010** | 1/2" Jet Black (RAL 9005) (Style 20) | | | $19.63 |
| **Sprinkler Wrench** | | | | | |
| | **56-000-6-387** | W-Type 6 Wrench | | | $252.89 |
| | **56-850-4-001** | W-Type 7 Wrench (Recessed Only) | | | $427.09 |

**Technical Data Sheet: TFP171**



*See latest Technical Data Sheets for specific Approvals, Listings, Design Parameters & available finishes. Sprinkler heads & escutcheons are priced separately unless otherwise noted.*

*Items marked **"C.O."** are made to order and may require longer delivery times. Please contact customer service for availability.*

## TY-FRB, 3mm Bulb, Quick Response, K=5.6, 1/2" NPT, Pendent, Recessed Pendent and Upright Sprinkler

100 Box Quantity (Upright 18 lbs/box (SIN TY313), Pendent 17 lbs/box (SIN TY323))

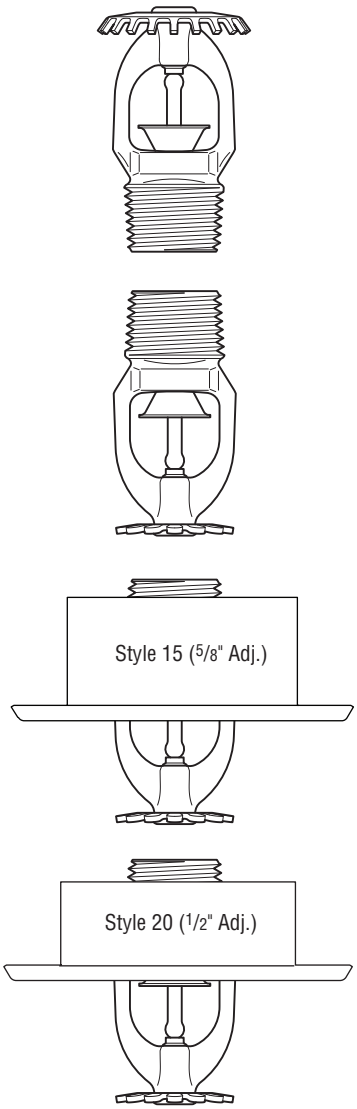


| C.O. | Upright | Pendent | Finish | Temperature | List Price |
|---|---|---|---|---|---|
| ◗ | 77-370-1-135 | 77-371-1-135 | Brass | 135°F (57°C) | $28.10 |
| | 77-370-1-155 | 77-371-1-155 | Brass | 155°F (68°C) | $28.10 |
| ◗ | 77-370-1-175 | 77-371-1-175 | Brass | 175°F (79°C) | $28.10 |
| | 77-370-1-200 | 77-371-1-200 | Brass | 200°F (93°C) | $28.10 |
| | 77-370-1-286 | 77-371-1-286 | Brass | 286°F (141°C) | $28.10 |
| ◗ | 77-370-9-135 | – | Chrome | 135°F (57°C) | $75.27 |
| ◗ | – | 77-371-9-135 | Chrome | 135°F (57°C) | $28.10 |
| | 77-370-9-155 | – | Chrome | 155°F (68°C) | $75.27 |
| | – | 77-371-9-155 | Chrome | 155°F (68°C) | $28.10 |
| ◗ | 77-370-9-175 | – | Chrome | 175°F (79°C) | $75.27 |
| ◗ | – | 77-371-9-175 | Chrome | 175°F (79°C) | $28.10 |
| ◗ | 77-370-9-200 | – | Chrome | 200°F (93°C) | $75.27 |
| ◗ | – | 77-371-9-200 | Chrome | 200°F (93°C) | $28.10 |
| ◗ | 77-370-9-286 | – | Chrome | 286°F (141°C) | $75.27 |
| ◗ | – | 77-371-9-286 | Chrome | 286°F (141°C) | $28.10 |
| ◗ | 77-370-4-135 | – | Signal White (RAL 9003) | 135°F (57°C) | $75.27 |
| ◗ | – | 77-371-4-135 | Signal White (RAL 9003) | 135°F (57°C) | $59.18 |
| | 77-370-4-155 | – | Signal White (RAL 9003) | 155°F (68°C) | $59.18 |
| | – | 77-371-4-155 | Signal White (RAL 9003) | 155°F (68°C) | $28.10 |
| ◗ | 77-370-4-175 | – | Signal White (RAL 9003) | 175°F (79°C) | $59.18 |
| ◗ | – | 77-371-4-175 | Signal White (RAL 9003) | 175°F (79°C) | $28.10 |
| ◗ | 77-370-4-200 | – | Signal White (RAL 9003) | 200°F (93°C) | $59.18 |
| ◗ | – | 77-371-4-200 | Signal White (RAL 9003) | 200°F (93°C) | $28.10 |
| ◗ | 77-370-4-286 | – | Signal White (RAL 9003) | 286°F (141°C) | $59.18 |
| ◗ | – | 77-371-4-286 | Signal White (RAL 9003) | 286°F (141°C) | $28.10 |
| ◗ | 77-370-5-155 | 77-371-5-155 | Jet Black (RAL 9005) | 155°F (68°C) | $75.27 |
| ◗ | 77-370-5-200 | 77-371-5-200 | Jet Black (RAL 9005) | 200°F (93°C) | $75.27 |
| | **Recessed Escutcheons (Order Separately)** | | | | |
| | 56-715-2-010 | 1/2" Brass Plated (Style 15) | | | $22.65 |
| | 56-715-9-010 | 1/2" Chrome Plated (Style 15) | | | $5.40 |
| | 56-715-4-010 | 1/2" Signal White (RAL 9003) (Style 15) | | | $5.40 |
| | 56-715-6-010 | 1/2" Jet Black (RAL 9005) (Style 15) | | | $19.63 |
| | 56-705-2-010 | 1/2" Brass Plated (Style 20) | | | $22.65 |
| | 56-705-9-010 | 1/2" Chrome Plated (Style 20) | | | $6.30 |
| | 56-705-4-010 | 1/2" Signal White (RAL 9003) (Style 20) | | | $6.30 |
| | 56-705-6-010 | 1/2" Jet Black (RAL 9005) (Style 20) | | | $19.63 |
| | **Sprinkler Wrench** | | | | |
| | 56-000-6-387 | W-Type 6 Wrench | | | $252.89 |
| | 56-850-4-001 | W-Type 7 Wrench (Recessed Only) | | | $427.09 |
| | **Technical Data Sheet: TFP172** | | | | |

*Items marked **"C.O."** are made to order and may require longer delivery times. Please contact customer service for availability.*

*See latest Technical Data Sheets for specific Approvals, Listings, Design Parameters & available finishes. Sprinkler heads & escutcheons are priced separately unless otherwise noted.*

## TY-FRB, 3mm Bulb, Quick Response, K=8.0, 3/4" NPT, Pendent, Recessed Pendent and Upright Sprinkler

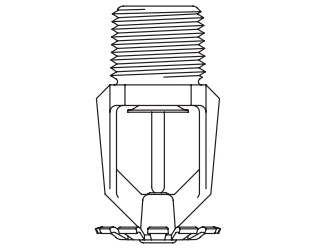

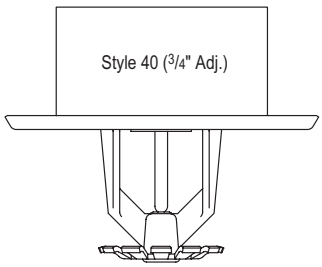


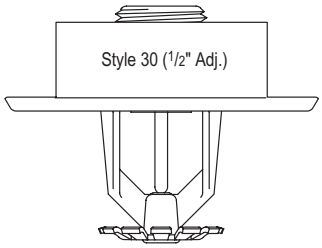


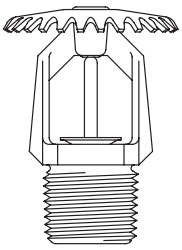

100 Box Quantity (Upright 18 lbs/box (SIN TY4131), Pendent 17 lbs/box (SIN TY4231))

| C.O. | Upright | Pendent | Finish | Temperature | List Price |
|---|---|---|---|---|---|
| ◗ | **57-390-1-135** | **57-391-1-135** | Natural Brass | 135°F (57°C) | $45.27 |
| | **57-390-1-155** | **57-391-1-155** | Natural Brass | 155°F (68°C) | $45.27 |
| ◗ | **57-390-1-175** | **57-391-1-175** | Natural Brass | 175°F (79°C) | $45.27 |
| ◗ | **57-390-1-200** | **57-391-1-200** | Natural Brass | 200°F (93°C) | $45.27 |
| | **57-390-1-286** | **57-391-1-286** | Natural Brass | 286°F (141°C) | $45.27 |
| ◗ | **57-390-9-135** | – | Chrome Plated | 135°F (57°C) | $100.18 |
| ◗ | – | **57-391-9-135** | Chrome Plated | 135°F (57°C) | $59.35 |
| | **57-390-9-155** | – | Chrome Plated | 155°F (68°C) | $100.18 |
| | – | **57-391-9-155** | Chrome Plated | 155°F (68°C) | $59.35 |
| ◗ | **57-390-9-175** | – | Chrome Plated | 175°F (79°C) | $100.18 |
| ◗ | – | **57-391-9-175** | Chrome Plated | 175°F (79°C) | $59.35 |
| | **57-390-9-200** | – | Chrome Plated | 200°F (93°C) | $100.18 |
| | – | **57-391-9-200** | Chrome Plated | 200°F (93°C) | $59.35 |
| ◗ | **57-390-9-286** | – | Chrome Plated | 286°F (141°C) | $100.18 |
| ◗ | – | **57-391-9-286** | Chrome Plated | 286°F (141°C) | $59.35 |
| ◗ | **57-390-4-135** | – | Signal White (RAL 9003) | 135°F (57°C) | $100.18 |
| ◗ | – | **57-391-4-135** | Signal White (RAL 9003) | 135°F (57°C) | $59.35 |
| | **57-390-4-155** | – | Signal White (RAL 9003) | 155°F (68°C) | $100.18 |
| | – | **57-391-4-155** | Signal White (RAL 9003) | 155°F (68°C) | $59.35 |
| ◗ | **57-390-4-175** | – | Signal White (RAL 9003) | 175°F (79°C) | $100.18 |
| ◗ | – | **57-391-4-175** | Signal White (RAL 9003) | 175°F (79°C) | $59.35 |
| | **57-390-4-200** | – | Signal White (RAL 9003) | 200°F (93°C) | $100.18 |
| | – | **57-391-4-200** | Signal White (RAL 9003) | 200°F (93°C) | $59.35 |
| ◗ | **57-390-4-286** | – | Signal White (RAL 9003) | 286°F (141°C) | $100.18 |
| ◗ | – | **57-391-4-286** | Signal White (RAL 9003) | 286°F (141°C) | $59.35 |
| | **Recessed Escutcheons (Order Separately)** | | | | |
| | **56-705-2-011** | 3/4" Brass Recessed (Style 30) | | | $22.65 |
| | **56-705-9-011** | 3/4" Chrome Recessed (Style 30) | | | $9.20 |
| | **56-705-4-011** | 3/4" Signal White (RAL 9003) Recessed (Style 30) | | | $9.20 |
| | **56-705-6-011** | 3/4" Jet Black (RAL 9005) Recessed (Style 30) | | | $20.98 |
| | **56-700-2-010** | 3/4" Brass Plated (Style 40) | | | $22.65 |
| | **56-700-9-010** | 3/4" Chrome Plated (Style 40) | | | $8.47 |
| | **56-700-4-010** | 3/4" Signal White (RAL 9003) Recessed (Style 40) | | | $8.47 |
| | **56-700-6-010** | 3/4" Jet Black (RAL 9005) Recessed (Style 40) | | | $20.98 |
| | **Sprinkler Wrench** | | | | |
| | **56-000-6-387** | W-Type 6 Wrench | | | $252.89 |
| | **56-850-4-001** | W-Type 7 Wrench (Recessed Only) | | | $427.09 |
| | **Technical Data Sheet: TFP171** | | | | |



*See latest Technical Data Sheets for specific Approvals, Listings, Design Parameters & available finishes. Sprinkler heads & escutcheons are priced separately unless otherwise noted.*

*Items marked **"C.O."** are made to order and may require longer delivery times. Please contact customer service for availability.*

## TY-FRB, 3mm Bulb, Quick Response, K=8.0, 1/2" NPT, Pendent and Upright Sprinkler

100 Box Quantity (Upright 18 lbs/box (SIN TY4831), Pendent 17 lbs/box (SIN TY4931))

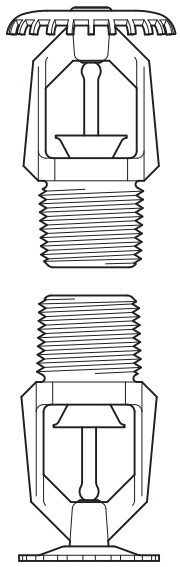

| C.O. | Upright | Pendent | Finish | Temperature | List Price |
|---|---|---|---|---|---|
| | **57-360-1-135** | **57-361-1-135** | Natural Brass | 135°F (57°C) | $109.25 |
| | **57-360-1-155** | **57-361-1-155** | Natural Brass | 155°F (68°C) | $109.25 |
| | **57-360-1-175** | **–** | Natural Brass | 175°F (79°C) | $109.25 |
| | **–** | **57-361-1-175** | Natural Brass | 175°F (79°C) | $147.49 |
| | **57-360-1-200** | **57-361-1-200** | Natural Brass | 200°F (93°C) | $109.25 |
| | **57-360-1-286** | **57-361-1-286** | Natural Brass | 286°F (141°C) | $109.25 |
| | **57-360-9-135** | **57-361-9-135** | Chrome Plated | 135°F (57°C) | $116.53 |
| | **57-360-9-155** | **57-361-9-155** | Chrome Plated | 155°F (68°C) | $116.53 |
| | **57-360-9-175** | **57-361-9-175** | Chrome Plated | 175°F (79°C) | $116.53 |
| | **57-360-9-200** | **57-361-9-200** | Chrome Plated | 200°F (93°C) | $116.53 |
| | **57-360-9-286** | **57-361-9-286** | Chrome Plated | 286°F (141°C) | $116.53 |
| | **57-360-4-135** | **57-361-4-135** | Signal White (RAL 9003) | 135°F (57°C) | $116.53 |
| | **57-360-4-155** | **57-361-4-155** | Signal White (RAL 9003) | 155°F (68°C) | $116.53 |
| | **57-360-4-175** | **57-361-4-175** | Signal White (RAL 9003) | 175°F (79°C) | $116.53 |
| | **57-360-4-200** | **57-361-4-200** | Signal White (RAL 9003) | 200°F (93°C) | $116.53 |
| | **57-360-4-286** | **57-361-4-286** | Signal White (RAL 9003) | 286°F (141°C) | $116.53 |
| | **Recessed Escutcheons (Order Separately)** | | | | |
| | **56-701-2-010** | 1/2" Brass Plated (Style 10) | | | $22.65 |
| | **56-701-9-010** | 1/2" Chrome Plated (Style 10) | | | $7.26 |
| | **56-701-4-010** | 1/2" Signal White (RAL 9003) (Style 10) | | | $7.26 |
| | **56-701-6-010** | 1/2" Jet Black (RAL 9005) (Style 10) | | | $19.63 |
| | **56-705-2-010** | 1/2" Brass Plated (Style 20) | | | $22.65 |
| | **56-705-9-010** | 1/2" Chrome Plated (Style 20) | | | $6.30 |
| | **56-705-4-010** | 1/2" Signal White (RAL 9003) (Style 20) | | | $6.30 |
| | **56-705-6-010** | 1/2" Jet Black (RAL 9005) (Style 20) | | | $19.63 |
| | **Sprinkler Wrench** | | | | |
| | **56-000-6-387** | W-Type 6 Wrench | | | $252.89 |
| | **56-850-4-001** | W-Type 7 Wrench (Recessed Only) | | | $427.09 |
| | **Technical Data Sheet: TFP171** | | | | |

*Items marked **"C.O."** are made to order and may require longer delivery times. Please contact customer service for availability.*

*See latest Technical Data Sheets for specific Approvals, Listings, Design Parameters & available finishes. Sprinkler heads & escutcheons are priced separately unless otherwise noted.*

## TY-FRB, 3mm Bulb, Quick Response, K=5.6, 1/2" NPT
## Horizontal Sidewall Sprinkler, Recessed Horizontal Sidewall and Vertical Sidewall

100 Box Quantity (18 lbs/box) (Horizontal Sidewall SIN TY3331) (Vertical Sidewall SIN TY3431)

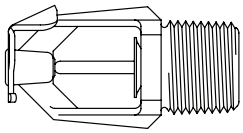

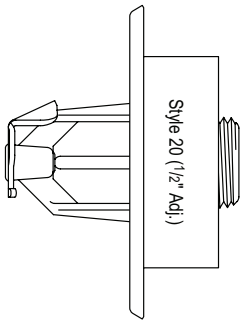


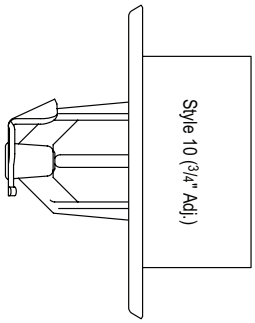


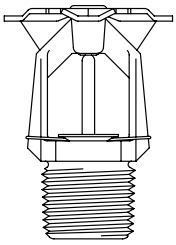

| C.O. | Horiz. Sidewall | Vertical Sidewall | Finish | Temperature | List Price |
|---|---|---|---|---|---|
| ◗ | **57-378-1-135** | – | Brass | 135°F (57°C) | $54.42 |
| ◗ | – | **57-375-1-135** | Brass | 135°F (57°C) | $115.20 |
| | **57-378-1-155** | – | Brass | 155°F (68°C) | $54.42 |
| | – | **57-375-1-155** | Brass | 155°F (68°C) | $115.20 |
| ◗ | **57-378-1-175** | – | Brass | 175°F (79°C) | $54.42 |
| ◗ | – | **57-375-1-175** | Brass | 175°F (79°C) | $115.20 |
| | **57-378-1-200** | – | Brass | 200°F (93°C) | $54.42 |
| | – | **57-375-1-200** | Brass | 200°F (93°C) | $115.20 |
| ◗ | **57-378-1-286** | – | Brass | 286°F (141°C) | $54.42 |
| ◗ | – | **57-375-1-286** | Brass | 286°F (141°C) | $115.20 |
| ◗ | **57-378-9-135** | – | Chrome | 135°F (57°C) | $54.42 |
| ◗ | – | **57-375-9-135** | Chrome | 135°F (57°C) | $151.72 |
| | **57-378-9-155** | – | Chrome | 155°F (68°C) | $54.42 |
| | – | **57-375-9-155** | Chrome | 155°F (68°C) | $151.72 |
| ◗ | **57-378-9-175** | – | Chrome | 175°F (79°C) | $54.42 |
| ◗ | – | **57-375-9-175** | Chrome | 175°F (79°C) | $151.72 |
| | **57-378-9-200** | – | Chrome | 200°F (93°C) | $54.42 |
| | – | **57-375-9-200** | Chrome | 200°F (93°C) | $151.72 |
| ◗ | **57-378-9-286** | – | Chrome | 286°F (141°C) | $54.42 |
| ◗ | – | **57-375-9-286** | Chrome | 286°F (141°C) | $151.72 |
| ◗ | **57-378-4-135** | – | Signal White (RAL 9003) | 135°F (57°C) | $54.42 |
| ◗ | – | **57-375-4-135** | Signal White (RAL 9003) | 135°F (57°C) | $151.72 |
| | **57-378-4-155** | – | Signal White (RAL 9003) | 155°F (68°C) | $54.42 |
| | – | **57-375-4-155** | Signal White (RAL 9003) | 155°F (68°C) | $151.72 |
| ◗ | **57-378-4-175** | – | Signal White (RAL 9003) | 175°F (79°C) | $54.42 |
| ◗ | – | **57-375-4-175** | Signal White (RAL 9003) | 175°F (79°C) | $151.72 |
| ◗ | **57-378-4-200** | – | Signal White (RAL 9003) | 200°F (93°C) | $54.42 |
| ◗ | – | **57-375-4-200** | Signal White (RAL 9003) | 200°F (93°C) | $151.72 |
| ◗ | **57-378-4-286** | – | Signal White (RAL 9003) | 286°F (141°C) | $54.42 |
| ◗ | – | **57-375-4-286** | Signal White (RAL 9003) | 286°F (141°C) | $151.72 |
| | **Recessed Escutcheons (Order Separately)** | | | | |
| | **56-701-2-010** | 1/2" Brass (Style 10) | | | $22.65 |
| | **56-701-9-010** | 1/2" Chrome (Style 10) | | | $7.26 |
| | **56-701-4-010** | 1/2" Signal White (RAL 9003) (Style 10) | | | $7.26 |
| | **56-701-6-010** | 1/2" Jet Black (RAL 9005) (Style 10) | | | $19.63 |
| | **56-705-2-010** | 1/2" Brass (Style 20) | | | $22.65 |
| | **56-705-9-010** | 1/2" Chrome (Style 20) | | | $6.30 |
| | **56-705-4-010** | 1/2" Signal White (RAL 9003) (Style 20) | | | $6.30 |
| | **56-705-6-010** | 1/2" Jet Black (RAL 9005) (Style 20) | | | $19.63 |
| | **Sprinkler Wrench** | | | | |
| | **56-000-6-387** | W-Type 6 Wrench | | | $252.89 |
| | **56-850-4-001** | W-Type 7 Wrench (Recessed Only) | | | $427.09 |
| | **Technical Data Sheet: TFP176** | | | | |

*See latest Technical Data Sheets for specific Approvals, Listings, Design Parameters & available finishes. Sprinkler heads & escutcheons are priced separately unless otherwise noted.*

*Items marked **"C.O."** are made to order and may require longer delivery times. Please contact customer service for availability.*

## TY-FRB, 3mm Bulb, K=5.6, 1/2" NPT Quick Response Upright Sprinklers Listed for Foam Applications

100 Box Quantity (Upright 18 lbs/box (SIN TY3131)

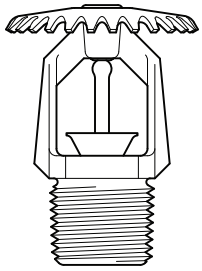

| C.O. | Upright | Finish | Temperature | List Price |
|---|---|---|---|---|
| | **57-370-1-155** | Natural Brass | 155°F (68°C) | $42.77 |
| ◗ | **57-370-1-175** | Natural Brass | 175°F (79°C) | $42.77 |
| | **57-370-1-200** | Natural Brass | 200°F (93°C) | $42.77 |
| | **57-370-1-286** | Natural Brass | 286°F (141°C) | $42.77 |
| | **Sprinkler Wrench** | | | |
| | **56-000-6-387** | W-Type 6 Wrench | | $252.89 |

**Technical Data Sheet: TFP171**

*Items marked **"C.O."** are made to order and may require longer delivery times. Please contact customer service for availability.*

*See latest Technical Data Sheets for specific Approvals, Listings, Design Parameters & available finishes. Sprinkler heads & escutcheons are priced separately unless otherwise noted.*

## Illusion™ Sprinkler ELO Extra Large Orifice, Concealed Pendent Sprinklers, Quick Response, Standard Coverage, K=11.2, 3/4" N.P.T.

40 Box Quantity (20 lbs/box) SIN TY5521

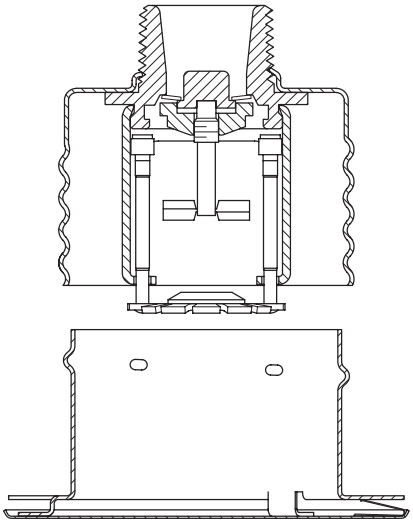

**Note: All "Special Order" cover plates are special ordered and are Non-Returnable. Please see "Terms & Conditions"**

| C.O. | Part No. | Model | Finish | Temperature | List Price |
|---|---|---|---|---|---|
| | 50-711-1-160 | Illusion Sprinkler | Brass | 160°F (71°C) | $147.33 |
| | 50-711-1-212 | Illusion Sprinkler | Brass | 212°F (100°C) | $147.34 |
| | **Cover Plates (For use with 160° F Sprinkler)** | | | | |
| | 56-892-1-135 | Cover Plate | Brushed Brass | 139°F (59°C) | $47.43 |
| | 56-892-9-135 | Cover Plate | Chrome | 139°F (59°C) | $47.43 |
| | 56-892-4-135 | Cover Plate | Signal White (RAL 9003) | 139°F (59°C) | $47.43 |
| | 56-892-0-135 | Cover Plate | Grey White (RAL 9002) | 139°F (59°C) | $47.43 |
| | 56-892-6-135 | Cover Plate | Jet Black (RAL 9005) | 139°F (59°C) | $47.43 |
| ◗ | 56-892-X-135 | Cover Plate | Special Order* | 139°F (59°C) | $66.11 |
| | **Cover Plates (For use with 212° F Sprinkler)** | | | | |
| | 56-892-1-165 | Cover Plate | Brushed Brass | 165°F (74°C) | $47.43 |
| | 56-892-9-165 | Cover Plate | Chrome | 165°F (74°C) | $47.43 |
| | 56-892-4-165 | Cover Plate | Signal White (RAL 9003) | 165°F (74°C) | $47.43 |
| | 56-892-0-165 | Cover Plate | Grey White (RAL 9002) | 165°F (74°C) | $47.43 |
| | 56-892-6-165 | Cover Plate | Jet Black (RAL 9005) | 165°F (74°C) | $47.43 |
| ◗ | 56-892-X-165 | Cover Plate | Special Order* | 165°F (74°C) | $66.11 |
| | **Clean Room Seals (Order Separately)** | | | | |
| | 56-908-1-001 | Air and Dust Seal | | | $29.93 |
| | **Sprinkler Wrench** | | | | |
| | 56-000-1-265 | W-Type 18 Wrench | | | $429.45 |
| | **Notes** | | | | |
| ◗ | 6012 | *Special Order paint match subject to set-up charge. (Net Price) | | | $630.79 |
| | **Technical Data Sheet: TFP184** | | | | |

## Series RFII, 5.6 K-factor, Standard Response, "Royal Flush II" Pendent Concealed Sprinklers

40 Box Quantity (15 lbs/box) SIN TY3551 - 250 psi

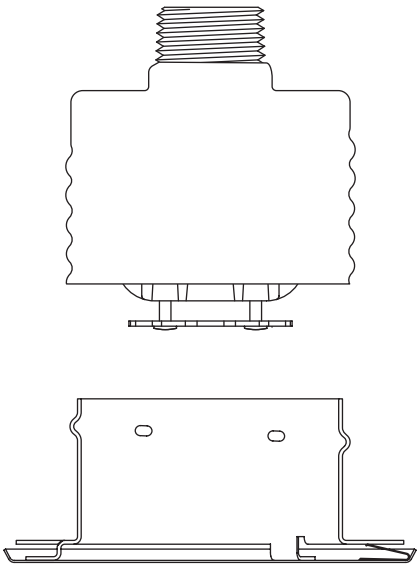

Cover Plate
(Order Separately)

**Note:**
**All "Special Order" cover plates are special ordered and are Non-Returnable. Please see "Terms & Conditions"**

| C.O. | Pendent | Finish | Temperature | List Price |
|---|---|---|---|---|
| | | **High Pressure (250 psi)** | | |
| ◗ | **51-790-1-155** | Brass | 155°F (68°C) | $76.61 |
| ◗ | **51-790-1-200** | Brass | 200°F (93°C) | $76.61 |
| | | **Cover Plate (For use with 155° F Sprinkler)** | | |
| | | 80 Box Quantity (14.5 lbs/box) | | |
| | **56-792-1-135** | Brushed Brass | 135°F (57°C) | $62.04 |
| ◗ | **56-792-2-135** | Brass | 135°F (57°C) | $68.87 |
| ◗ | **56-792-8-135** | Brushed Chrome | 135°F (57°C) | $68.87 |
| | **56-792-9-135** | Chrome | 135°F (57°C) | $23.29 |
| | **56-792-0-135** | Grey White (RAL9002) | 135°F (57°C) | $23.29 |
| | **56-792-4-135** | Signal White (RAL 9003) | 135°F (57°C) | $23.29 |
| | **56-792-6-135** | Jet Black (RAL 9005) | 135°F (57°C) | $62.04 |
| | **56-792-7-135** | Terra Brown (RAL 8082) | 135°F (57°C) | $62.04 |
| ◗ | **56-792-X-135** | Special Order* | 135°F (57°C) | $62.04 |
| | | **Cover Plate (For use with 200° F Sprinkler)** | | |
| | | 80 Box Quantity (14.5 lbs/box) | | |
| | **56-792-1-165** | Brushed Brass | 165°F (74°C) | $62.04 |
| ◗ | **56-792-2-165** | Brass | 165°F (74°C) | $68.87 |
| ◗ | **56-792-8-165** | Brushed Chrome | 165°F (74°C) | $68.87 |
| | **56-792-9-165** | Chrome | 165°F (74°C) | $23.29 |
| | **56-792-0-165** | Grey White (RAL9002) | 165°F (74°C) | $23.29 |
| | **56-792-4-165** | Signal White (RAL 9003) | 165°F (74°C) | $23.29 |
| | **56-792-6-165** | Jet Black (RAL 9005) | 165°F (74°C) | $62.04 |
| | **56-792-7-165** | Terra Brown (RAL 8082) | 165°F (74°C) | $62.04 |
| ◗ | **56-792-X-165** | Special Order* | 165°F (74°C) | $62.04 |
| | | **Notes** | | |
| ◗ | **6012** | *Special Order paint match subject to set-up charge. (Net Price) | | $630.79 |
| | | **Accessories** | | |
| | **56-000-1-300** | Cover Plate Installation Tool | | $268.31 |
| | **91-201-1-015** | Protective Cap (Net Price) | | $0.87 |
| | | **Sprinkler Wrench** | | |
| | **56-000-1-075** | RFII Wrench | | $427.45 |
| | | **Air and Dust Seal** | | |
| | **56-908-1-001** | Air and Dust Seal | | $29.93 |
| | | **Technical Data Sheet: TFP181** | | |

*Items marked **"C.O."** are made to order and may require longer delivery times. Please contact customer service for availability.*

*See latest Technical Data Sheets for specific Approvals, Listings, Design Parameters & available finishes. Sprinkler heads & escutcheons are priced separately unless otherwise noted.*

## Series RFII, 5.6 K-factor, Quick Response, "Royal Flush II" Pendent Concealed Sprinklers

40 Box Quantity (15 lbs/box) SIN TY3531 - 250 psi

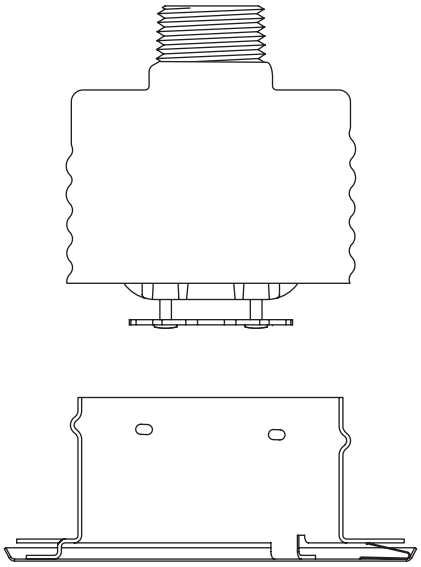

Cover Plate
(Order Separately)

**Note:**
**All "Special Order" cover plates are special ordered and are Non-Returnable. Please see "Terms & Conditions"**

| C.O. | Pendent | Finish | Temperature | List Price |
|---|---|---|---|---|
| | | **High Pressure (250 psi)** | | |
| ◗ | **51-792-1-155** | Brass | 155°F (68°C) | $53.10 |
| ◗ | **51-792-1-200** | Brass | 200°F (93°C) | $53.10 |
| | | **Cover Plate (For use with 155° F Sprinkler)** | | |
| | | 80 Box Quantity (14.5 lbs/box) | | |
| | **56-792-1-135** | Brushed Brass | 135°F (57°C) | $62.04 |
| ◗ | **56-792-2-135** | Brass | 135°F (57°C) | $68.87 |
| ◗ | **56-792-8-135** | Brushed Chrome | 135°F (57°C) | $68.87 |
| | **56-792-9-135** | Chrome | 135°F (57°C) | $23.29 |
| | **56-792-0-135** | Grey White (RAL9002) | 135°F (57°C) | $23.29 |
| | **56-792-4-135** | Signal White (RAL 9003) | 135°F (57°C) | $23.29 |
| | **56-792-6-135** | Jet Black (RAL 9005) | 135°F (57°C) | $62.04 |
| | **56-792-7-135** | Terra Brown (RAL 8082) | 135°F (57°C) | $62.04 |
| ◗ | **56-792-X-135** | Special Order* | 135°F (57°C) | $62.04 |
| | | **Cover Plate (For use with 200° F Sprinkler)** | | |
| | | 80 Box Quantity (14.5 lbs/box) | | |
| | **56-792-1-165** | Brushed Brass | 165°F (74°C) | $62.04 |
| ◗ | **56-792-2-165** | Brass | 165°F (74°C) | $68.87 |
| ◗ | **56-792-8-165** | Brushed Chrome | 165°F (74°C) | $68.87 |
| | **56-792-9-165** | Chrome | 165°F (74°C) | $23.29 |
| | **56-792-0-165** | Grey White (RAL9002) | 165°F (74°C) | $23.29 |
| | **56-792-4-165** | Signal White (RAL 9003) | 165°F (74°C) | $23.29 |
| | **56-792-6-165** | Jet Black (RAL 9005) | 165°F (74°C) | $62.04 |
| | **56-792-7-165** | Terra Brown (RAL 8082) | 165°F (74°C) | $62.04 |
| ◗ | **56-792-X-165** | Special Order* | 135°F (57°C) | $62.04 |
| | | **Notes** | | |
| ◗ | **6012** | *Special Order paint match subject to set-up charge. (Net Price) | | $630.79 |
| | | **Accessories** | | |
| | **56-000-1-300** | Cover Plate Installation Tool | | $268.31 |
| | **91-201-1-015** | Protective Cap (Net Price) | | $0.87 |
| | | **Sprinkler Wrench** | | |
| | **56-000-1-075** | RFII Wrench | | $427.45 |
| | | **Air and Dust Seal** | | |
| | **56-908-1-001** | Air and Dust Seal | | $29.93 |
| | | **Technical Data Sheet: TFP181** | | |



*See latest Technical Data Sheets for specific Approvals, Listings, Design Parameters & available finishes. Sprinkler heads & escutcheons are priced separately unless otherwise noted.*

*Items marked **"C.O."** are made to order and may require longer delivery times. Please contact customer service for availability.*

## Series RFII, 5.6 K-factor, Quick Response, "Royal Flush II" Flat Plate Horizontal Sidewall Concealed Sprinklers

28 Box Quantity (20 lbs/box) SIN TY3521 - 250 psi

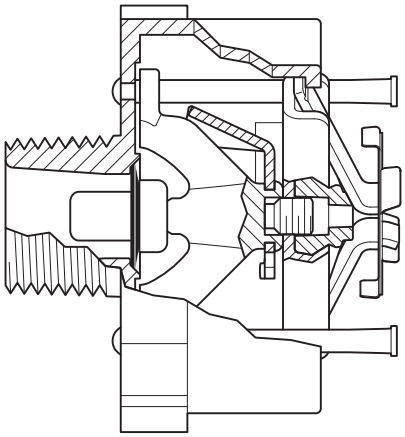

**Note:**
**All "Special Order" cover plates are special ordered and are Non-Returnable. Please see "Terms & Conditions"**

| C.O. | Pendent | Finish | Temperature | List Price |
|---|---|---|---|---|
| | | **High Pressure (250 psi)** | | |
| ◗ | **50-550-1-165** | Brass | 160°F (71°C) | $258.97 |
| ◗ | **50-550-1-212** | Brass | 212°F (100°C) | $258.97 |
| | | **Cover Plates (Order Separately) (For use with 160° F Sprinkler)** | | |
| ◗ | **56-204-0-135** | Ivory (RAL1015) | 135°F (57°C) | $44.84 |
| ◗ | **56-204-2-135** | Beige (RAL1001) | 135°F (57°C) | $44.84 |
| ◗ | **56-204-3-135** | Pure White (RAL9010) | 135°F (57°C) | $44.84 |
| | **56-204-4-135** | Signal White (RAL9003) | 135°F (57°C) | $16.82 |
| | **56-204-5-135** | Grey White (RAL9002) | 135°F (57°C) | $44.84 |
| ◗ | **56-204-6-135** | Terra Brown (RAL8028) | 135°F (57°C) | $44.84 |
| | **56-204-7-135** | Black (RAL9005) | 135°F (57°C) | $44.84 |
| | **56-204-8-135** | Brushed Brass | 135°F (57°C) | $101.86 |
| | **56-204-9-135** | Brushed Chrome | 135°F (57°C) | $73.72 |
| ◗ | **56-204-X-135** | Special Order* | 135°F (57°C) | $44.84 |
| | | **Cover Plates (Order Separately) (For use with 212° F Sprinkler)** | | |
| ◗ | **56-204-0-165** | Ivory (RAL1015) | 165°F (74°C) | $44.84 |
| ◗ | **56-204-2-165** | Beige (RAL1001) | 165°F (74°C) | $44.84 |
| ◗ | **56-204-3-165** | Pure White (RAL9010) | 165°F (74°C) | $44.84 |
| | **56-204-4-165** | Signal White (RAL9003) | 165°F (74°C) | $16.82 |
| | **56-204-5-165** | Grey White (RAL9002) | 165°F (74°C) | $44.84 |
| ◗ | **56-204-6-165** | Terra Brown (RAL8028) | 165°F (74°C) | $44.84 |
| | **56-204-7-165** | Black (RAL9005) | 165°F (74°C) | $44.84 |
| | **56-204-8-165** | Brushed Brass | 165°F (74°C) | $101.86 |
| | **56-204-9-165** | Brushed Chrome | 165°F (74°C) | $73.72 |
| ◗ | **56-204-X-165** | Special Order* | 165°F (74°C) | $44.84 |
| | | **Options** | | |
| ◗ | **6012** | *Special Order paint match subject to set-up charge. (Net Price) | | $630.79 |
| | | **Accessories** | | |
| | **56-000-1-300** | Cover Plate Installation Tool | | $268.31 |
| | **91-320-1-031** | Protective Cap (Net Price) | | $0.87 |
| | | **Sprinkler Wrench** | | |
| | **56-320-1-015** | W-Type 37 Wrench | | $444.94 |
| | | **Technical Data Sheet: TFP185** | | |

*Items marked **"C.O."** are made to order and may require longer delivery times. Please contact customer service for availability.*

*See latest Technical Data Sheets for specific Approvals, Listings, Design Parameters & available finishes. Sprinkler heads & escutcheons are priced separately unless otherwise noted.*

## Series RFII-MRI, 5.6 K-factor, Standard Response, "Royal Flush II" Pendent Concealed Sprinklers

40 Box Quantity (15 lbs/box) SIN TY3550

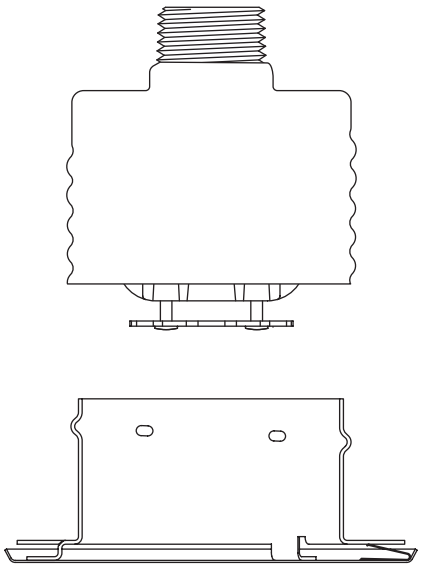

Cover Plate
(Order Separately)

**Note:**
**All "Special Order" cover plates are special ordered and are Non-Returnable. Please see "Terms & Conditions"**

| C.O. | Pendent | Finish | Temperature | List Price |
|---|---|---|---|---|
| | | **Standard Response** | | |
| ◗ | **51-801-1-155** | Brass | 155°F (68°C) | $559.17 |
| ◗ | **51-801-1-200** | Brass | 200°F (93°C) | $559.17 |
| | | **Cover Plate (For use with 155° F Sprinkler)** | | |
| | | 80 Box Quantity (14.5 lbs/box) | | |
| ◗ | **56-794-1-135** | Brass | 135°F (57°C) | $112.32 |
| ◗ | **56-794-0-135** | Grey White (RAL9002) | 135°F (57°C) | $112.32 |
| ◗ | **56-794-4-135** | Signal White (RAL 9003) | 135°F (57°C) | $112.32 |
| ◗ | **56-794-6-135** | Jet Black (RAL 9005) | 135°F (57°C) | $112.32 |
| ◗ | **56-794-X-135** | Special Order* | 135°F (57°C) | $112.32 |
| | | **Cover Plate (For use with 200° F Sprinkler)** | | |
| | | 80 Box Quantity (14.5 lbs/box) | | |
| ◗ | **56-794-1-165** | Brass | 165°F (74°C) | $112.32 |
| ◗ | **56-794-0-165** | Grey White (RAL9002) | 165°F (74°C) | $112.32 |
| ◗ | **56-794-4-165** | Signal White (RAL 9003) | 165°F (74°C) | $112.32 |
| ◗ | **56-794-6-165** | Jet Black (RAL 9005) | 165°F (74°C) | $112.32 |
| ◗ | **56-794-X-165** | Special Order* | 165°F (74°C) | $112.32 |
| | | **Notes** | | |
| ◗ | **6012** | *Special Order paint match subject to set-up charge. (Net Price) | | $630.79 |
| | | **Accessories** | | |
| | **56-000-1-300** | Cover Plate Installation Tool | | $268.31 |
| | **91-201-1-015** | Protective Cap (Net Price) | | $0.87 |
| | | **Sprinkler Wrench** | | |
| | **56-000-1-075** | RFII Wrench | | $427.45 |
| | | **Air and Dust Seal** | | |
| | **56-908-1-001** | Air and Dust Seal | | $29.93 |
| | | **Technical Data Sheet: TFP182** | | |



*See latest Technical Data Sheets for specific Approvals, Listings, Design Parameters & available finishes. Sprinkler heads & escutcheons are priced separately unless otherwise noted.*

*Items marked **"C.O."** are made to order and may require longer delivery times. Please contact customer service for availability.*

## Series RFII-MRI, 5.6 K-factor, Quick Response, "Royal Flush II" Pendent Concealed Sprinklers

40 Box Quantity (15 lbs/box) SIN TY3530

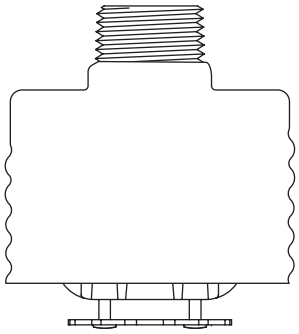

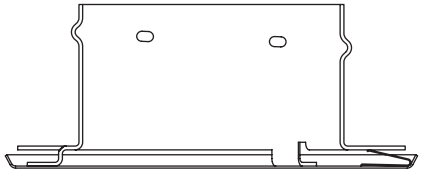

Cover Plate
(Order Separately)

**Note:**
**All "Special Order" cover plates are special ordered and are Non-Returnable. Please see "Terms & Conditions"**

| C.O. | Pendent | Finish | Temperature | List Price |
|---|---|---|---|---|
| | | **Quick Response** | | |
| ◗ | **51-800-1-155** | Brass | 155°F (68°C) | $563.88 |
| ◗ | **51-800-1-200** | Brass | 200°F (93°C) | $563.88 |
| | | **Cover Plate (For use with 155° F Sprinkler)** | | |
| | | 80 Box Quantity (14.5 lbs/box) | | |
| ◗ | **56-794-1-135** | Brass | 135°F (57°C) | $112.32 |
| ◗ | **56-794-0-135** | Grey White (RAL9002) | 135°F (57°C) | $112.32 |
| ◗ | **56-794-4-135** | Signal White (RAL 9003) | 135°F (57°C) | $112.32 |
| ◗ | **56-794-6-135** | Jet Black (RAL 9005) | 135°F (57°C) | $112.32 |
| ◗ | **56-794-X-135** | Special Order* | 135°F (57°C) | $112.32 |
| | | **Cover Plate (For use with 200° F Sprinkler)** | | |
| | | 80 Box Quantity (14.5 lbs/box) | | |
| ◗ | **56-794-1-165** | Brass | 165°F (74°C) | $112.32 |
| ◗ | **56-794-0-165** | Grey White (RAL9002) | 165°F (74°C) | $112.32 |
| ◗ | **56-794-4-165** | Signal White (RAL 9003) | 165°F (74°C) | $112.32 |
| ◗ | **56-794-6-165** | Jet Black (RAL 9005) | 165°F (74°C) | $112.32 |
| ◗ | **56-794-X-165** | Special Order* | 165°F (74°C) | $112.32 |
| | | **Notes** | | |
| ◗ | **6012** | *Special Order paint match subject to set-up charge. (Net Price) | | $630.79 |
| | | **Accessories** | | |
| | **56-000-1-300** | Cover Plate Installation Tool | | $268.31 |
| | **91-201-1-015** | Protective Cap (Net Price) | | $0.87 |
| | | **Sprinkler Wrench** | | |
| | **56-000-1-075** | RFII Wrench | | $427.45 |
| | | **Air and Dust Seal** | | |
| | **56-908-1-001** | Air and Dust Seal | | $29.93 |
| | | **Technical Data Sheet: TFP182** | | |

*Items marked **"C.O."** are made to order and may require longer delivery times. Please contact customer service for availability.*

*See latest Technical Data Sheets for specific Approvals, Listings, Design Parameters & available finishes. Sprinkler heads & escutcheons are priced separately unless otherwise noted.*

## Model EC-25, K=25.2, 1" NPT, Upright, Area/Density, Extended Coverage (SIN TY9128)

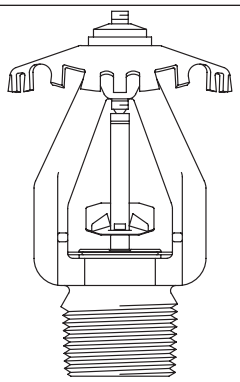

SIN TY9128

| C.O. | Upright | Description | Temperature | List Price |
|---|---|---|---|---|
| | 58-450-1-165 | Brass - NPT Thread | 165°F (74°C) | $166.05 |
| | 58-450-1-214 | Brass- NPT Thread | 212°F (100°C) | $166.05 |
| | **Sprinkler Wrench** | | | |
| | 56-872-1-025 | W-Type 1 Wrench | | $319.17 |

**Technical Data Sheet: TFP213**

## Series EC-14, Upright Sprinklers K=14.0, 3/4" N.P.T.

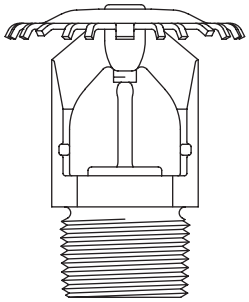

100 Box Quantity 27 lbs/box SIN TY6137

| C.O. | Upright | Description | Temperature | List Price |
|---|---|---|---|---|
| ◗ | 51-896-1-135 | Brass | 135°F (57°C) | $59.67 |
| | 51-896-1-155 | Brass | 155°F (68°C) | $59.67 |
| ◗ | 51-896-1-175 | Brass | 175°F (79°C) | $59.67 |
| | 51-896-1-200 | Brass | 200°F (93°C) | $59.67 |
| ◗ | 51-896-1-286 | Brass | 286°F (141°C) | $59.67 |
| ◗ | 51-896-9-135 | Chrome | 135°F (57°C) | $78.46 |
| | 51-896-9-155 | Chrome | 155°F (68°C) | $78.46 |
| ◗ | 51-896-9-175 | Chrome | 175°F (79°C) | $94.15 |
| ◗ | 51-896-9-200 | Chrome | 200°F (93°C) | $78.46 |
| ◗ | 51-896-9-286 | Chrome | 286°F (141°C) | $78.46 |
| ◗ | 51-896-4-135 | Signal White (RAL 9003) | 135°F (57°C) | $78.46 |
| | 51-896-4-155 | Signal White (RAL 9003) | 155°F (68°C) | $78.46 |
| ◗ | 51-896-4-175 | Signal White (RAL 9003) | 175°F (79°C) | $78.46 |
| ◗ | 51-896-4-200 | Signal White (RAL 9003) | 200°F (93°C) | $78.46 |
| ◗ | 51-896-4-286 | Signal White (RAL 9003) | 286°F (141°C) | $78.46 |
| ◗ | 51-896-5-135 | Jet Black (RAL 9005) | 135°F (57°C) | $78.46 |
| ◗ | 51-896-5-155 | Jet Black (RAL 9005) | 155°F (68°C) | $78.46 |
| ◗ | 51-896-5-175 | Jet Black (RAL 9005) | 175°F (79°C) | $78.46 |
| ◗ | 51-896-5-200 | Jet Black (RAL 9005) | 200°F (93°C) | $78.46 |
| ◗ | 51-896-5-286 | Jet Black (RAL 9005) | 286°F (141°C) | $78.46 |
| | **Sprinkler Wrench** | | | |
| | 56-895-1-001 | W-Type 3 Wrench | | $349.96 |
| | **Technical Data Sheet: TFP220** | | | |



*See latest Technical Data Sheets for specific Approvals, Listings, Design Parameters & available finishes. Sprinkler heads & escutcheons are priced separately unless otherwise noted.*

*Items marked **"C.O."** are made to order and may require longer delivery times. Please contact customer service for availability.*

Section 1 Standard Spray Sprinklers
Section 2 Extended Coverage Sprinklers
Section 3 Storage Sprinklers
Section 4 Residential Products
Section 5 Dry Sprinklers
Section 6 Special Sprinklers
Section 7 Nozzles and Sprinkler Accessories

## Series EC-14, Pendent and Recessed Pendent Sprinklers K=14.0, 3/4" N.P.T.

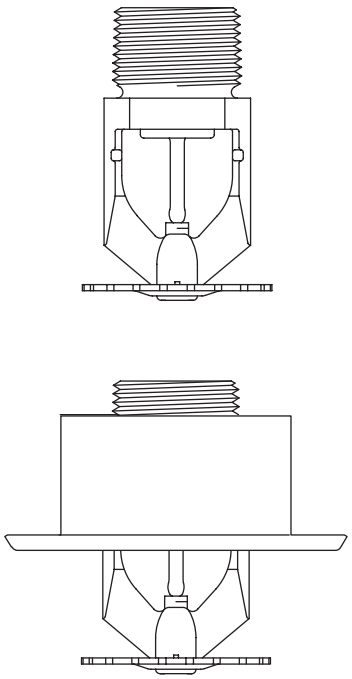

100 Box Quantity, 27 lbs/box (SIN TY6237)

| C.O. | Pendent | Description | Temperature | List Price |
|---|---|---|---|---|
| ◗ | **51-895-1-135** | Brass | 135°F (57°C) | $61.32 |
| | **51-895-1-155** | Brass | 155°F (68°C) | $61.32 |
| ◗ | **51-895-1-175** | Brass | 175°F (79°C) | $61.32 |
| | **51-895-1-200** | Brass | 200°F (93°C) | $61.32 |
| ◗ | **51-895-1-286** | Brass | 286°F (141°C) | $61.32 |
| ◗ | **51-895-9-135** | Chrome | 135°F (57°C) | $71.36 |
| | **51-895-9-155** | Chrome | 155°F (68°C) | $71.36 |
| ◗ | **51-895-9-175** | Chrome | 175°F (79°C) | $71.36 |
| ◗ | **51-895-9-200** | Chrome | 200°F (93°C) | $71.36 |
| ◗ | **51-895-9-286** | Chrome | 286°F (141°C) | $71.36 |
| ◗ | **51-895-4-135** | Signal White (RAL 9003) | 135°F (57°C) | $71.36 |
| | **51-895-4-155** | Signal White (RAL 9003) | 155°F (68°C) | $71.36 |
| ◗ | **51-895-4-175** | Signal White (RAL 9003) | 175°F (79°C) | $71.36 |
| ◗ | **51-895-4-200** | Signal White (RAL 9003) | 200°F (93°C) | $71.36 |
| ◗ | **51-895-4-286** | Signal White (RAL 9003) | 286°F (141°C) | $71.36 |
| ◗ | **51-895-5-155** | Jet Black (RAL 9005) | 155°F (68°C) | $165.56 |
| ◗ | **51-895-5-175** | Jet Black (RAL 9005) | 175°F (79°C) | $165.56 |
| ◗ | **51-895-5-200** | Jet Black (RAL 9005) | 200°F (93°C) | $165.56 |
| ◗ | **51-895-5-286** | Jet Black (RAL 9005) | 286°F (141°C) | $165.56 |
| | **Recessed Escutcheons (Order Separately)** | | | |
| | **56-705-2-011** | 3/4" Brass Recessed (Style 30) | | $22.65 |
| | **56-705-9-011** | 3/4" Chrome Recessed (Style 30) | | $9.20 |
| | **56-705-4-011** | 3/4" Signal White (RAL 9003) Recessed (Style 30) | | $9.20 |
| | **56-705-6-011** | 3/4" Jet Black (RAL 9005) Recessed (Style 30) | | $20.98 |
| | **56-700-2-010** | 3/4" Brass Recessed (Style 40) | | $22.65 |
| | **56-700-9-010** | 3/4" Chrome Recessed (Style 40) | | $8.47 |
| | **56-700-4-010** | 3/4" Signal White (RAL 9003) Recessed (Style 40) | | $8.47 |
| | **56-700-6-010** | 3/4" Jet Black (RAL 9005) Recessed (Style 40) | | $20.98 |
| ◗ | **208102** | 3/4" Chrome Recessed (Style 60) | | $10.83 |
| ◗ | **208104** | 3/4" Signal White (RAL 9003) Recessed (Style 60) | | $10.83 |
| ◗ | **208107** | 3/4" Brass Recessed (Style 60) | | $15.24 |
| ◗ | **208108** | 3/4" White over Stainless Steel Recessed (Style 60) | | POA |
| | **Sprinkler Wrench** | | | |
| | **56-895-1-001** | W-Type 3 Wrench | | $349.96 |
| | **56-665-7-001** | W-Type 22 (Recessed Only) | | $429.59 |
| | **Technical Data Sheet: TFP220** | | | |

*Items marked **"C.O."** are made to order and may require longer delivery times. Please contact customer service for availability.*

*See latest Technical Data Sheets for specific Approvals, Listings, Design Parameters & available finishes. Sprinkler heads & escutcheons are priced separately unless otherwise noted.*

## Series EC-11, Pendent, Recessed Pendent and Upright Sprinklers - K=11.2, 3/4" NPT

100 Box Quantity (Upright 27 lbs/box (SIN TY5137), Pendent 27 lbs/box (SIN TY5237))

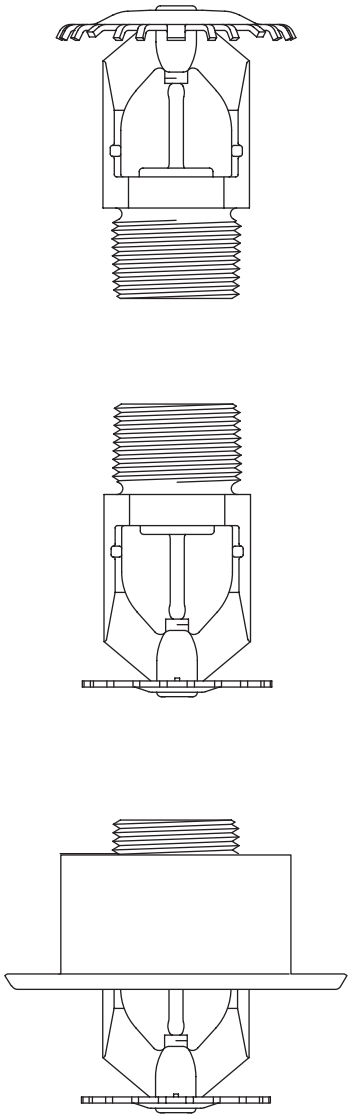

| C.O. | Upright | Pendent | Description | Temperature | List Price |
|---|---|---|---|---|---|
| ◗ | 51-894-1-135 | 51-893-1-135 | Brass | 135°F (57°C) | $68.68 |
| | 51-894-1-155 | 51-893-1-155 | Brass | 155°F (68°C) | $68.68 |
| ◗ | 51-894-1-175 | 51-893-1-175 | Brass | 175°F (79°C) | $68.68 |
| | 51-894-1-200 | 51-893-1-200 | Brass | 200°F (93°C) | $68.68 |
| ◗ | 51-894-1-286 | 51-893-1-286 | Brass | 286°F (141°C) | $68.68 |
| ◗ | 51-894-9-135 | – | Chrome | 135°F (57°C) | $105.57 |
| ◗ | – | 51-893-9-135 | Chrome | 135°F (57°C) | $73.11 |
| | 51-894-9-155 | – | Chrome | 155°F (68°C) | $105.57 |
| | – | 51-893-9-155 | Chrome | 155°F (68°C) | $73.11 |
| ◗ | 51-894-9-175 | – | Chrome | 175°F (79°C) | $105.57 |
| ◗ | – | 51-893-9-175 | Chrome | 175°F (79°C) | $73.11 |
| ◗ | 51-894-9-200 | – | Chrome | 200°F (93°C) | $105.57 |
| ◗ | – | 51-893-9-200 | Chrome | 200°F (93°C) | $73.11 |
| ◗ | 51-894-9-286 | – | Chrome | 286°F (141°C) | $105.57 |
| ◗ | – | 51-893-9-286 | Chrome | 286°F (141°C) | $73.11 |
| ◗ | 51-894-4-135 | – | Signal White (RAL 9003) | 135°F (57°C) | $105.57 |
| ◗ | – | 51-893-4-135 | Signal White (RAL 9003) | 135°F (57°C) | $73.11 |
| | 51-894-4-155 | – | Signal White (RAL 9003) | 155°F (68°C) | $105.57 |
| | – | 51-893-4-155 | Signal White (RAL 9003) | 155°F (68°C) | $73.11 |
| ◗ | 51-894-4-175 | – | Signal White (RAL 9003) | 175°F (79°C) | $105.57 |
| ◗ | – | 51-893-4-175 | Signal White (RAL 9003) | 175°F (79°C) | $73.11 |
| ◗ | 51-894-4-200 | – | Signal White (RAL 9003) | 200°F (93°C) | $105.57 |
| ◗ | – | 51-893-4-200 | Signal White (RAL 9003) | 200°F (93°C) | $73.11 |
| ◗ | 51-894-4-286 | – | Signal White (RAL 9003) | 286°F (141°C) | $105.57 |
| ◗ | – | 51-893-4-286 | Signal White (RAL 9003) | 286°F (141°C) | $73.11 |
| ◗ | 51-894-5-155 | 51-893-5-155 | Jet Black (RAL 9005) | 155°F (68°C) | $143.60 |
| ◗ | 51-894-5-200 | 51-893-5-200 | Jet Black (RAL 9005) | 200°F (93°C) | $143.60 |
| | **Recessed Escutcheons (Order Separately)** | | | | |
| | 56-705-2-011 | 3/4" Brass Recessed (Style 30) | | | $22.65 |
| | 56-705-9-011 | 3/4" Chrome Recessed (Style 30) | | | $9.20 |
| | 56-705-4-011 | 3/4" Signal White (RAL 9003) Recessed (Style 30) | | | $9.20 |
| | 56-705-6-011 | 3/4" Jet Black (RAL 9005) Recessed (Style 30) | | | $20.98 |
| | 56-700-2-010 | 3/4" Brass Recessed (Style 40) | | | $22.65 |
| | 56-700-9-010 | 3/4" Chrome Recessed (Style 40) | | | $8.47 |
| | 56-700-4-010 | 3/4" Signal White (RAL 9003) Recessed (Style 40) | | | $8.47 |
| | 56-700-6-010 | 3/4" Jet Black (RAL 9005) Recessed (Style 40) | | | $20.98 |
| ◗ | 208102 | 3/4" Chrome Recessed (Style 60) | | | $10.83 |
| ◗ | 208104 | 3/4" Signal White (RAL 9003) Recessed (Style 60) | | | $10.83 |
| ◗ | 208107 | 3/4" Brass Recessed (Style 60) | | | $15.24 |
| | **Sprinkler Wrench** | | | | |
| | 56-895-1-001 | W-Type 3 Wrench | | | $349.96 |
| | 56-665-7-001 | W-Type 22 (Recessed Only) | | | $429.59 |
| | **Technical Data Sheet: TFP220** | | | | |

*See latest Technical Data Sheets for specific Approvals, Listings, Design Parameters & available finishes. Sprinkler heads & escutcheons are priced separately unless otherwise noted.*

*Items marked **"C.O."** are made to order and may require longer delivery times. Please contact customer service for availability.*

Section 1 Standard Spray Sprinklers
Section 2 Extended Coverage Sprinklers
Section 3 Storage Sprinklers
Section 4 Residential Products
Section 5 Dry Sprinklers
Section 6 Special Sprinklers
Section 7 Nozzles and Sprinkler Accessories

## TY-FRB, 3 mm Bulb, K=5.6, 1/2" NPT, Quick Response
## Extended Coverage, Horizontal Sidewall and Recessed Horizontal Sidewall Sprinklers

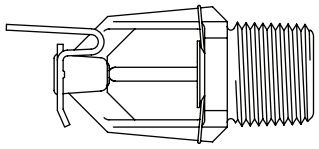

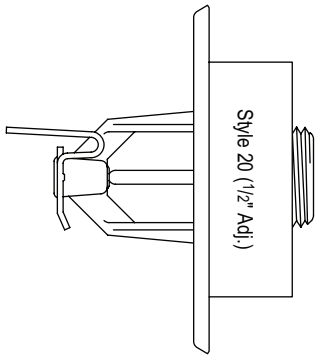


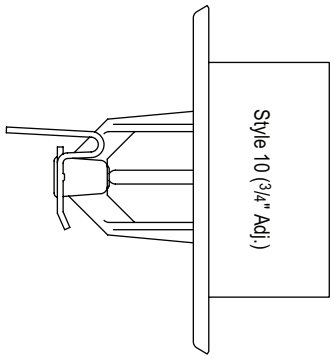


100 Box Quantity (21 lbs/box) (SIN TY3332)

| C.O. | Horizontal Sidewall | Finish | Temperature | List Price |
|---|---|---|---|---|
| ◗ | **57-376-1-135** | Brass | 135°F (57°C) | $90.25 |
| | **57-376-1-155** | Brass | 155°F (68°C) | $90.25 |
| ◗ | **57-376-1-175** | Brass | 175°F (79°C) | $90.25 |
| ◗ | **57-376-9-135** | Chrome | 135°F (57°C) | $90.38 |
| | **57-376-9-155** | Chrome | 155°F (68°C) | $90.38 |
| ◗ | **57-376-9-175** | Chrome | 175°F (79°C) | $90.38 |
| ◗ | **57-376-4-135** | Signal White (RAL 9003) | 135°F (57°C) | $90.38 |
| | **57-376-4-155** | Signal White (RAL 9003) | 155°F (68°C) | $90.38 |
| ◗ | **57-376-4-175** | Signal White (RAL 9003) | 175°F (79°C) | $90.38 |
| ◗ | **57-376-5-135** | Jet Black (RAL 9005) | 135°F (57°C) | $102.73 |
| ◗ | **57-376-5-155** | Jet Black (RAL 9005) | 155°F (68°C) | $102.73 |
| ◗ | **57-376-5-175** | Jet Black (RAL 9005) | 175°F (79°C) | $102.73 |
| | **Recessed Escutcheons (Order Separately)** | | | |
| | **56-701-2-010** | 1/2" Brass Recessed (Style 10) | | $22.65 |
| | **56-701-9-010** | 1/2" Chrome Recessed (Style 10) | | $7.26 |
| | **56-701-4-010** | 1/2" Signal White (RAL 9003) Recessed (Style 10) | | $7.26 |
| | **56-701-6-010** | 1/2" Jet Black (RAL 9005) Recessed (Style 10) | | $19.63 |
| | **56-705-2-010** | 1/2" Brass Recessed (Style 20) | | $22.65 |
| | **56-705-9-010** | 1/2" Chrome Recessed (Style 20) | | $6.30 |
| | **56-705-4-010** | 1/2" Signal White (RAL 9003) (Style 20) | | $6.30 |
| | **56-705-6-010** | 1/2" Jet Black (RAL 9005) (Style 20) | | $19.63 |
| | **Sprinkler Wrench** | | | |
| | **56-000-6-387** | W-Type 6 Wrench | | $252.89 |
| | **56-850-4-001** | W-Type 7 Wrench (Recessed Only) | | $427.09 |

**Technical Data Sheet: TFP296**

*Items marked **"C.O."** are made to order and may require longer delivery times. Please contact customer service for availability.*

*See latest Technical Data Sheets for specific Approvals, Listings, Design Parameters & available finishes. Sprinkler heads & escutcheons are priced separately unless otherwise noted.*

## TY-FRB, 3 mm Bulb, K=8.0, 3/4" NPT, Quick Response-Extended Coverage, Horizontal Sidewall and Recessed Horizontal Sidewall Sprinklers

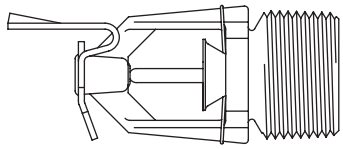

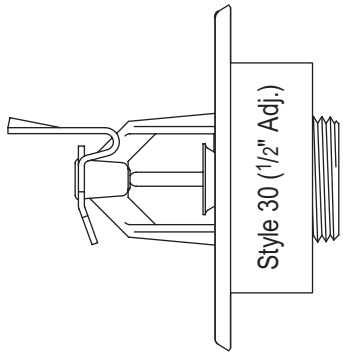


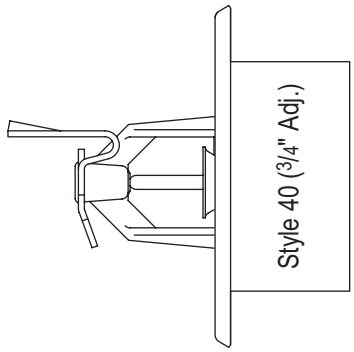


100 Box Quantity (21 lbs/box) (SIN TY4332)

| C.O. | Sidewall | Finish | Temperature | List Price |
|---|---|---|---|---|
| ◗ | **57-396-1-135** | Brass | 135°F (57°C) | $89.61 |
| | **57-396-1-155** | Brass | 155°F (68°C) | $89.61 |
| ◗ | **57-396-1-175** | Brass | 175°F (79°C) | $89.61 |
| ◗ | **57-396-9-135** | Chrome | 135°F (57°C) | $101.98 |
| | **57-396-9-155** | Chrome | 155°F (68°C) | $101.98 |
| ◗ | **57-396-9-175** | Chrome | 175°F (79°C) | $101.98 |
| ◗ | **57-396-4-135** | Signal White (RAL 9003) | 135°F (57°C) | $101.98 |
| | **57-396-4-155** | Signal White (RAL 9003) | 155°F (68°C) | $101.98 |
| ◗ | **57-396-4-175** | Signal White (RAL 9003) | 175°F (79°C) | $101.98 |
| ◗ | **57-396-5-135** | Jet Black (RAL 9005) | 135°F (57°C) | $110.34 |
| ◗ | **57-396-5-155** | Jet Black (RAL 9005) | 155°F (68°C) | $110.34 |
| ◗ | **57-396-5-175** | Jet Black (RAL 9005) | 175°F (79°C) | $110.34 |
| | | **Recessed Escutcheons (Order Separately)** | | |
| | **56-705-2-011** | 3/4" Brass Recessed (Style 30) | | $22.65 |
| | **56-705-9-011** | 3/4" Chrome Recessed (Style 30) | | $9.20 |
| | **56-705-4-011** | 3/4" Signal White (RAL 9003) Recessed (Style 30) | | $9.20 |
| | **56-705-6-011** | 3/4" Jet Black (RAL 9005) Recessed (Style 30) | | $20.98 |
| | **56-700-2-010** | 3/4" Brass Recessed (Style 40) | | $22.65 |
| | **56-700-9-010** | 3/4" Chrome Recessed (Style 40) | | $8.47 |
| | **56-700-4-010** | 3/4" Signal White (RAL 9003) Recessed (Style 40) | | $8.47 |
| | **56-700-6-010** | 3/4" Jet Black (RAL 9005) Recessed (Style 40) | | $20.98 |
| | | **Sprinkler Wrench** | | |
| | **56-000-6-387** | W-Type 6 Wrench | | $252.89 |
| | **56-850-4-001** | W-Type 7 Wrench (Recessed Only) | | $427.09 |

**Technical Data Sheet: TFP296**



*See latest Technical Data Sheets for specific Approvals, Listings, Design Parameters & available finishes. Sprinkler heads & escutcheons are priced separately unless otherwise noted.*

*Items marked **"C.O."** are made to order and may require longer delivery times. Please contact customer service for availability.*

## SW-20 ECOH, Sidewall Sprinklers, K=11.2, 3/4" N.P.T.

100 Box Quantity (32 lbs/box) (SIN TY5332)

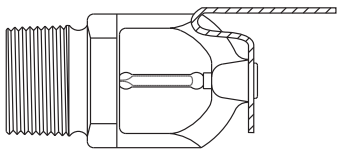

| C.O. | Part No. | Model | Finish | Temperature | List Price |
|---|---|---|---|---|---|
| | 51-072-1-155 | ECOH ELO SW-20 | Natural Brass | 155°F (68°C) | $472.59 |
| | 51-072-1-200 | ECOH ELO SW-20 | Natural Brass | 200°F (93°C) | $472.59 |
| | 51-072-9-155 | ECOH ELO SW-20 | Chrome Plated | 155°F (68°C) | $536.94 |
| | 51-072-9-200 | ECOH ELO SW-20 | Chrome Plated | 200°F (93°C) | $536.94 |
| | 51-072-4-155 | ECOH ELO SW-20 | Signal White (RAL 9003) | 155°F (68°C) | $536.94 |
| | 51-072-4-200 | ECOH ELO SW-20 | Signal White (RAL 9003) | 200°F (93°C) | $536.94 |
| **Sprinkler Wrench** | | | | | |
| | 56-895-1-001 | W-Type 3 Wrench | | | $349.96 |
| **Technical Data Sheet: TFP230** | | | | | |

## SW-24 ECOH, Sidewall Sprinklers, K=11.2, 3/4" N.P.T.

100 Box Quantity (32 lbs/box) (SIN TY5337)

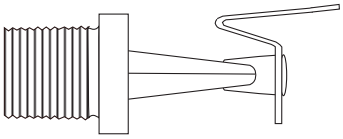

| C.O. | Part No. | Model | Finish | Temperature | List Price |
|---|---|---|---|---|---|
| | 51-073-1-200 | ECOH ELO SW-24 | Natural Brass | 200°F (93°C) | $468.43 |
| | 51-073-9-200 | ECOH ELO SW-24 | Chrome Plated | 200°F (93°C) | $539.64 |
| | 51-073-4-200 | ECOH ELO SW-24 | Signal White (RAL 9003) | 200°F (93°C) | $539.64 |
| **Sprinkler Wrench** | | | | | |
| | 56-895-1-001 | W-Type 3 Wrench | | | $349.96 |
| **Technical Data Sheet: TFP230** | | | | | |

## ELOC Extended Coverage, Concealed Sprinklers, K=11.2, 3/4" N.P.T. (SIN TY5522)

40 Box Quantity (20 lbs/box) (SIN TY5522)

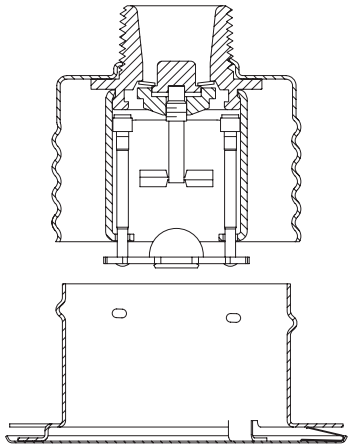

**Note: All "Special Order" cover plates are special ordered and are Non-Returnable. Please see "Terms & Conditions"**

| C.O. | Part No. | Model | Finish | Temperature | List Price |
|---|---|---|---|---|---|
| | 50-701-1-160 | ELOC | Brass | 160°F (71°C) | $135.81 |
| ◗ | 50-701-1-212 | ELOC | Brass | 212°F (100°C) | $135.81 |
| **Cover Plates (For use with 160° F Sprinkler) (Order Separately)** | | | | | |
| | 56-892-0-135 | ELOC Cover Plate | Grey White (RAL9002) | 139°F (59°C) | $47.43 |
| | 56-892-1-135 | ELOC Cover Plate | Brushed Brass | 139°F (59°C) | $47.43 |
| | 56-892-4-135 | ELOC Cover Plate | Signal White (RAL 9003) | 139°F (59°C) | $47.43 |
| | 56-892-8-135 | ELOC Cover Plate | Brushed Chrome | 139°F (59°C) | $47.43 |
| | 56-892-9-135 | ELOC Cover Plate | Bright Chrome | 139°F (59°C) | $47.43 |
| ◗ | 56-892-X-135 | ELOC Cover Plate | Special Order* | 139°F (59°C) | $66.11 |
| **Cover Plates (For use with 212° F Sprinkler) (Order Separately)** | | | | | |
| | 56-892-0-165 | ELOC Cover Plate | Grey White (RAL9002) | 165°F (74°C) | $47.43 |
| | 56-892-9-165 | ELOC Cover Plate | Bright Chrome | 165°F (74°C) | $47.43 |
| **Clean Room Seals (Order Separately)** | | | | | |
| | 56-908-1-001 | ELOC Clean Room Seal | | | $29.93 |
| **Sprinkler Wrench** | | | | | |
| | 56-000-1-265 | W-Type 18 Wrench | | | $429.45 |
| **Notes** | | | | | |
| ◗ | 6012 | ***Special Order paint match subject to set-up charge. (Net Price)** | | | $630.79 |
| **Technical Data Sheet: TFP250** | | | | | |

*Items marked **"C.O."** are made to order and may require longer delivery times. Please contact customer service for availability.*

*See latest Technical Data Sheets for specific Approvals, Listings, Design Parameters & available finishes. Sprinkler heads & escutcheons are priced separately unless otherwise noted.*

## Series RFII EC, 5.6 K-factor, "Royal Flush II" Pendent Concealed Sprinklers
## Extended Coverage, Quick and Standard Response

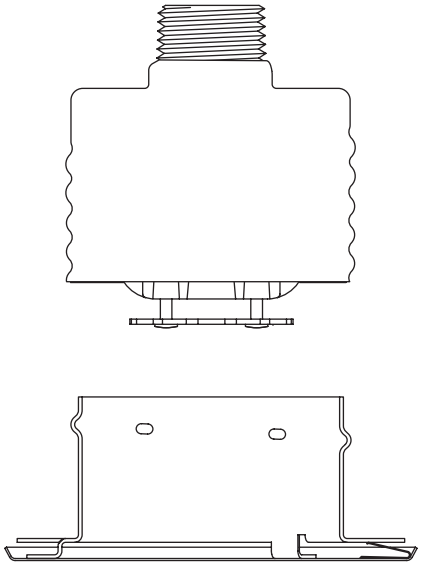

Cover Plate
(Order Separately)

**Note: All "Special Order" cover plates are special ordered and are Non-Returnable. Please see "Terms & Conditions"**

40 Box Quantity (15 lbs/box) (SIN TY3532)

| C.O. | Pendent | Finish | Temperature | List Price |
|---|---|---|---|---|
| | | **Standard Pressure (175 psi)** | | |
| | **51-794-1-155** | Bronze | 155°F (68°C) | $109.25 |
| | | **Cover Plate (For use with 155° F Sprinkler)** | | |
| | | 80 Box Quantity (14.5 lbs/box) | | |
| | **56-792-1-135** | Brushed Brass | 135°F (57°C) | $62.04 |
| ◗ | **56-792-2-135** | Brass | 135°F (57°C) | $68.87 |
| ◗ | **56-792-8-135** | Brushed Chrome | 135°F (57°C) | $68.87 |
| | **56-792-9-135** | Chrome | 135°F (57°C) | $23.29 |
| | **56-792-0-135** | Grey White (RAL9002) | 135°F (57°C) | $23.29 |
| | **56-792-4-135** | Signal White (RAL 9003) | 135°F (57°C) | $23.29 |
| | **56-792-6-135** | Jet Black (RAL 9005) | 135°F (57°C) | $62.04 |
| | **56-792-7-135** | Terra Brown (RAL 8082) | 135°F (57°C) | $62.04 |
| ◗ | **56-792-X-135** | Special Order* | 135°F (57°C) | $62.04 |
| | | **Accessories** | | |
| | **56-000-1-300** | Cover Plate Installation Tool | | $268.31 |
| | **91-201-1-015** | Protective Cap (Net Price) | | $0.87 |
| | | **Air and Dust Seal** | | |
| | **56-908-1-001** | Air and Dust Seal | | $29.93 |
| | | **Sprinkler Wrench** | | |
| | **56-000-1-075** | RFII Wrench | | $427.45 |
| | | **Notes** | | |
| ◗ | **6012** | *Special Order paint match subject to set-up charge. (Net Price) | | $630.79 |
| | | **Technical Data Sheet: TFP260** | | |



*See latest Technical Data Sheets for specific Approvals, Listings, Design Parameters & available finishes. Sprinkler heads & escutcheons are priced separately unless otherwise noted.*

*Items marked **"C.O."** are made to order and may require longer delivery times. Please contact customer service for availability.*

Section 1 Standard Spray Sprinklers
Section 2 Extended Coverage Sprinklers
Section 3 Storage Sprinklers
Section 4 Residential Products
Section 5 Dry Sprinklers
Section 6 Special Sprinklers
Section 7 Nozzles and Sprinkler Accessories

## RFII-C, 5.6 K-factor, Concealed Pendent Sprinklers for Corridors & Hallways, ½" N.P.T. ECLH

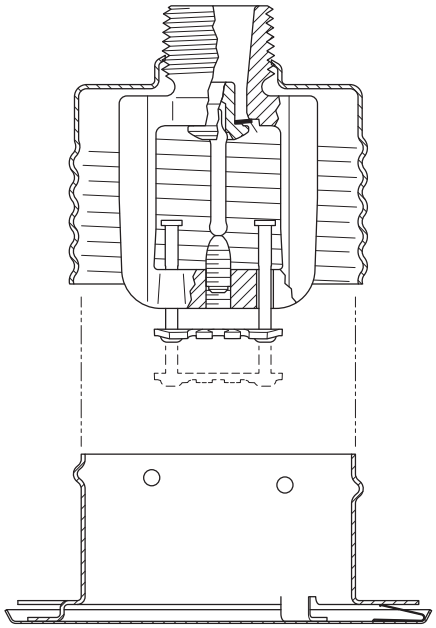

**Note: All "Special Order" cover plates are special ordered and are Non-Returnable. Please see "Terms & Conditions"**

40 Box Quantity (15 lbs/box) (SIN TY3582)

| C.O. | Pendent | Finish | Temperature | List Price |
|---|---|---|---|---|
| | | **Standard Pressure (175 psi)** | | |
| | **51-734-1-155** | Bronze | 155°F (68°C) | $144.30 |
| | **51-734-1-200** | Bronze | 200°F (93°C) | $144.30 |
| | | **Cover Plate (For use with 155° F Sprinkler)** | | |
| | | 80 Box Quantity (14.5 lbs/box) | | |
| | **56-792-1-135** | Brushed Brass | 135°F (57°C) | $62.04 |
| ◗ | **56-792-2-135** | Brass | 135°F (57°C) | $68.87 |
| ◗ | **56-792-8-135** | Brushed Chrome | 135°F (57°C) | $68.87 |
| | **56-792-9-135** | Chrome | 135°F (57°C) | $23.29 |
| | **56-792-0-135** | Grey White (RAL9002) | 135°F (57°C) | $23.29 |
| | **56-792-4-135** | Signal White (RAL 9003) | 135°F (57°C) | $23.29 |
| | **56-792-6-135** | Jet Black (RAL 9005) | 135°F (57°C) | $62.04 |
| | **56-792-7-135** | Terra Brown (RAL 8082) | 135°F (57°C) | $62.04 |
| ◗ | **56-792-X-135** | Special Order* | 135°F (57°C) | $62.04 |
| | | **Cover Plate (For use with 200° F Sprinkler)** | | |
| | | 80 Box Quantity (14.5 lbs/box) | | |
| | **56-792-1-165** | Brushed Brass | 165°F (74°C) | $62.04 |
| ◗ | **56-792-2-165** | Brass | 165°F (74°C) | $68.87 |
| ◗ | **56-792-8-165** | Brushed Chrome | 165°F (74°C) | $68.87 |
| | **56-792-9-165** | Chrome | 165°F (74°C) | $23.29 |
| | **56-792-0-165** | Grey White (RAL9002) | 165°F (74°C) | $23.29 |
| | **56-792-4-165** | Signal White (RAL 9003) | 165°F (74°C) | $23.29 |
| | **56-792-6-165** | Jet Black (RAL 9005) | 165°F (74°C) | $62.04 |
| | **56-792-7-165** | Terra Brown (RAL 8082) | 165°F (74°C) | $62.04 |
| ◗ | **56-792-X-165** | Special Order* | 165°F (74°C) | $62.04 |
| | | **Accessories** | | |
| | **56-000-1-300** | Cover Plate Installation Tool | | $268.31 |
| | **91-201-1-015** | Protective Cap (Net Price) | | $0.87 |
| | | **Air and Dust Seal** | | |
| | **56-908-1-001** | Air and Dust Seal | | $29.93 |
| | | **Sprinkler Wrench** | | |
| | **56-000-1-076** | W-Type 40 Wrench | | $255.14 |
| | | **Notes** | | |
| ◗ | **6012** | *Special Order paint match subject to set-up charge. (Net Price) | | $630.79 |
| | | **Technical Data Sheet: TFP263** | | |

*Items marked **"C.O."** are made to order and may require longer delivery times. Please contact customer service for availability.*

*See latest Technical Data Sheets for specific Approvals, Listings, Design Parameters & available finishes. Sprinkler heads & escutcheons are priced separately unless otherwise noted.*

## Series RFII-MRI EC, 5.6 K-factor, "Royal Flush II" Pendent Concealed Sprinklers
## Extended Coverage, Quick Response

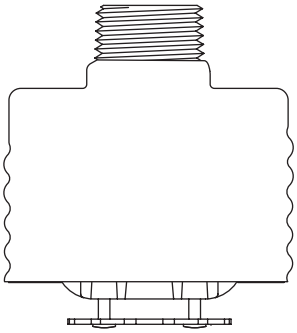

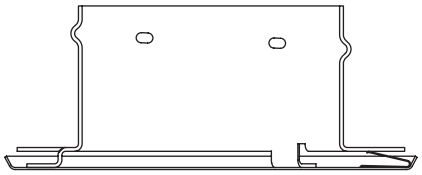

Cover Plate
(Order Separately)

**Note: All "Special Order" cover plates are special ordered and are Non-Returnable. Please see "Terms & Conditions"**

100 Box Quantity (15 lbs/box) (SIN TY3537)

| C.O. | Pendent | Finish | Temperature | List Price |
|---|---|---|---|---|
| | | **Quick Response (175 psi)** | | |
| ◗ | **51-802-1-155** | Bronze | 155°F (68°C) | $620.51 |
| ◗ | **51-802-1-200** | Bronze | 200°F (93°C) | $620.51 |
| | | **Cover Plate (For use with 155° F Sprinkler)** | | |
| | | 80 Box Quantity (14.5 lbs/box) | | |
| ◗ | **56-794-1-135** | Brass | 135°F (57°C) | $112.32 |
| ◗ | **56-794-0-135** | Grey White (RAL9002) | 135°F (57°C) | $112.32 |
| ◗ | **56-794-4-135** | Signal White (RAL 9003) | 135°F (57°C) | $112.32 |
| ◗ | **56-794-6-135** | Jet Black (RAL 9005) | 135°F (57°C) | $112.32 |
| ◗ | **56-794-X-135** | Special Order* | 135°F (57°C) | $112.32 |
| | | **Cover Plate (For use with 200° F Sprinkler)** | | |
| | | 80 Box Quantity (14.5 lbs/box) | | |
| ◗ | **56-794-1-165** | Brass | 165°F (74°C) | $112.32 |
| ◗ | **56-794-0-165** | Grey White (RAL9002) | 165°F (74°C) | $112.32 |
| ◗ | **56-794-4-165** | Signal White (RAL 9003) | 165°F (74°C) | $112.32 |
| ◗ | **56-794-6-165** | Jet Black (RAL 9005) | 165°F (74°C) | $112.32 |
| ◗ | **56-794-X-165** | Special Order* | 165°F (74°C) | $112.32 |
| | | **Accessories** | | |
| | **56-000-1-300** | Cover Plate Installation Tool | | $268.31 |
| | **91-201-1-015** | Protective Cap (Net Price) | | $0.87 |
| | | **Air and Dust Seal** | | |
| | **56-908-1-001** | Air and Dust Seal | | $29.93 |
| | | **Sprinkler Wrench** | | |
| | **56-000-1-075** | RFII Wrench | | $427.45 |
| | | **Notes** | | |
| ◗ | **6012** | *Special Order paint match subject to set-up charge. (Net Price) | | $630.79 |
| | | **Technical Data Sheet: TFP262** | | |



*See latest Technical Data Sheets for specific Approvals, Listings, Design Parameters & available finishes. Sprinkler heads & escutcheons are priced separately unless otherwise noted.*

*Items marked **"C.O."** are made to order and may require longer delivery times. Please contact customer service for availability.*

Section 1 Standard Spray Sprinklers
Section 2 Extended Coverage Sprinklers
Section 3 Storage Sprinklers
Section 4 Residential Products
Section 5 Dry Sprinklers
Section 6 Special Sprinklers
Section 7 Nozzles and Sprinkler Accessories

## Series RFIII, 8.0 K-factor, Flat Plate Concealed Horizontal Sidewall Sprinklers Extended Coverage, Quick Response, Light Hazard

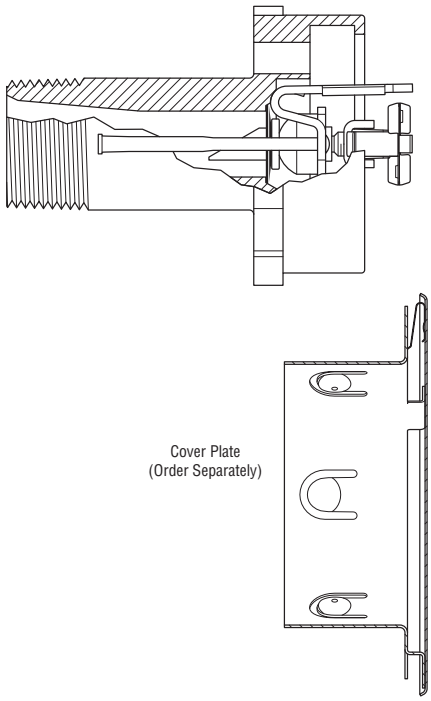


**Note: All "Special Order" cover plates are special ordered and are Non-Returnable. Please see "Terms & Conditions"**

28 Box Quantity (24.2 lbs/box) (SIN TY4522)

| C.O. | Pendent | Finish | Temperature | List Price |
|---|---|---|---|---|
| | **Standard Pressure (175 psi)** | | | |
| | **51-113-1-160** | Brass | 160°F (71°C) | $264.34 |
| | **Cover Plate** | | | |
| | 80 Box Quantity (14.5 lbs/box) | | | |
| ◗ | **56-204-0-135** | Ivory (RAL1015) | 135°F (57°C) | $44.84 |
| ◗ | **56-204-2-135** | Beige (RAL1001) | 135°F (57°C) | $44.84 |
| ◗ | **56-204-3-135** | Pure White (RAL9010) | 135°F (57°C) | $44.84 |
| | **56-204-4-135** | Signal White (RAL9003) | 135°F (57°C) | $16.82 |
| | **56-204-5-135** | Grey White (RAL9002) | 135°F (57°C) | $44.84 |
| ◗ | **56-204-6-135** | Terra Brown (RAL8028) | 135°F (57°C) | $44.84 |
| | **56-204-7-135** | Black (RAL9005) | 135°F (57°C) | $44.84 |
| | **56-204-8-135** | Brushed Brass | 135°F (57°C) | $101.86 |
| | **56-204-9-135** | Brushed Chrome | 135°F (57°C) | $73.72 |
| ◗ | **56-204-X-135** | Special Order* | 135°F (57°C) | $44.84 |
| | **Accessories** | | | |
| | **56-000-1-300** | Cover Plate Installation Tool | | $268.31 |
| | **Sprinkler Wrench** | | | |
| | **56-320-1-015** | W-Type 37 Wrench | | $444.94 |
| | **Notes** | | | |
| ◗ | **6012** | *Special Order paint match subject to set-up charge. (Net Price) | | $630.79 |
| | **Technical Data Sheet: TFP270** | | | |

## Model TY-FRL, K=5.6, 1/2" NPT Extended Coverage Quick Response Horizontal Sidewall Sprinkler

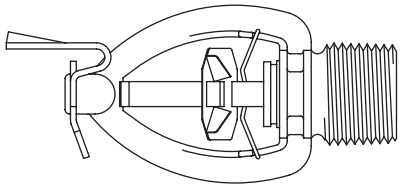

100 Box Quantity (20 lbs/box) (SIN TY3322)

| C.O. | Horizontal Sidewall | Finish | Temperature | List Price |
|---|---|---|---|---|
| | **58-970-1-165** | Brass | 165°F (74°C) | $206.86 |
| | **58-970-9-165** | Chrome | 165°F (74°C) | $218.02 |
| | **Sprinkler Wrench** | | | |
| | **56-000-1-849** | W-Type 9 Wrench | | $230.03 |
| | **Technical Data Sheet: TFP280** | | | |

*Items marked **"C.O."** are made to order and may require longer delivery times. Please contact customer service for availability.*

*See latest Technical Data Sheets for specific Approvals, Listings, Design Parameters & available finishes. Sprinkler heads & escutcheons are priced separately unless otherwise noted.*

## Model TY-FRL, K=8.0, 3/4" NPT, Quick Response Extended Coverage Horizontal Sidewall Sprinklers

100 Box Quantity (25 lbs/box) (SIN TY4322)

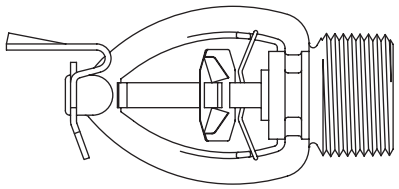

| C.O. | Horizontal Sizewall | Description | Temperature | List Price |
|---|---|---|---|---|
| | **58-170-1-165** | Brass | 165°F (74°C) | $218.02 |
| | **58-170-9-165** | Chrome | 165°F (74°C) | $257.60 |
| | **Sprinkler Wrench** | | | |
| | **56-000-1-849** | W-Type 9 Wrench | | $230.03 |
| | **Technical Data Sheet: TFP280** | | | |

## CHEC Concealed Horizontal Sidewall Extended Coverage Sprinklers, K=8.0, 3/4" N.P.T. ECLH (SIN TY4332)

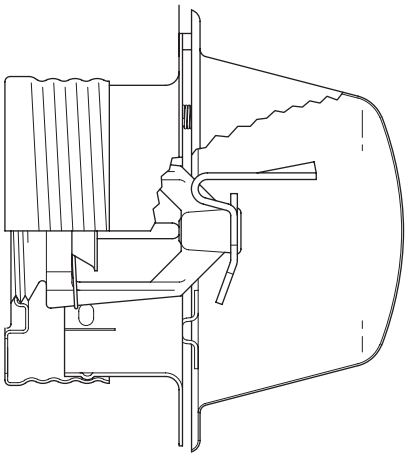

**Note: All "Special Order" cover plates are special ordered and are Non-Returnable. Please see "Terms & Conditions"**

| C.O. | Number | Model | Temperature | List Price |
|---|---|---|---|---|
| | **51-396-1-155** | CHEC Sidewall | 155°F (68°C) | $97.72 |
| | **Cover Plate (Order Separately)** | | | |
| | **56-396-4-135** | Signal White (RAL 9003) | | $52.58 |
| | **56-396-9-135** | Chrome | | $52.58 |
| ◗ | **56-396-X-135** | Special Order* | | $52.58 |
| | **Sprinkler Wrench** | | | |
| | **56-850-4-001** | Wrench W-Type 7 | | $427.09 |
| | **Notes** | | | |
| ◗ | **6012** | *Special Order paint match subject to set-up charge. (Net Price) | | $630.79 |
| | **Technical Data Sheet: TFP265** | | | |



*See latest Technical Data Sheets for specific Approvals, Listings, Design Parameters & available finishes. Sprinkler heads & escutcheons are priced separately unless otherwise noted.*

*Items marked **"C.O."** are made to order and may require longer delivery times. Please contact customer service for availability.*

Section 1 Standard Spray Sprinklers
Section 2 Extended Coverage Sprinklers
Section 3 Storage Sprinklers
Section 4 Residential Products
Section 5 Dry Sprinklers
Section 6 Special Sprinklers
Section 7 Nozzles and Sprinkler Accessories

## EC-8 QR Pendent and Recessed Pendent Sprinklers K=8.0, 3/4" N.P.T. ECLH

100 Box Quantity (24 lbs/box) (SIN TY4232)

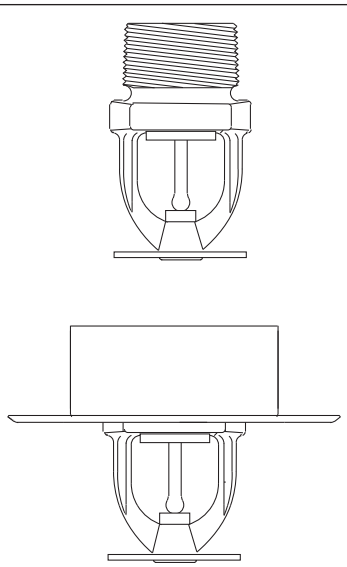

| C.O. | Number | Model | Finish | Temperature | List Price |
|---|---|---|---|---|---|
| ◗ | **50-801-1-135** | EC-8 QR | Brass | 135°F (57°C) | $99.93 |
| | **50-801-1-155** | EC-8 QR | Brass | 155°F (68°C) | $99.93 |
| ◗ | **50-801-9-135** | EC-8 QR | Chrome | 135°F (57°C) | $101.87 |
| | **50-801-9-155** | EC-8 QR | Chrome | 155°F (68°C) | $101.87 |
| ◗ | **50-801-4-135** | EC-8 QR | Signal White (RAL 9003) | 135°F (57°C) | $101.87 |
| | **50-801-4-155** | EC-8 QR | Signal White (RAL 9003) | 155°F (68°C) | $101.87 |
| | **Recessed Escutcheons (Order Separately)** | | | | |
| ◗ | **56-705-2-011** | 3/4" Brass Recessed (Style 30) | | | $22.65 |
| | **56-705-9-011** | 3/4" Chrome Recessed (Style 30) | | | $9.20 |
| | **56-705-4-011** | 3/4" Signal White (RAL 9003) Recessed (Style 30) | | | $9.20 |
| | **56-700-2-010** | 3/4" Brass Recessed (Style 40) | | | $22.65 |
| | **56-700-9-010** | 3/4" Chrome Recessed (Style 40) | | | $8.47 |
| | **56-700-4-010** | 3/4" Signal White (RAL 9003) Recessed (Style 40) | | | $8.47 |
| | **Sprinkler Wrench** | | | | |
| | **56-895-1-001** | W-Type 3 Wrench | | | $349.96 |
| | **56-000-6-838** | W-Type 23 Wrench (Recessed Only) | | | $428.44 |
| | **Technical Data Sheet: TFP223** | | | | |

*Items marked **"C.O."** are made to order and may require longer delivery times. Please contact customer service for availability.*

*See latest Technical Data Sheets for specific Approvals, Listings, Design Parameters & available finishes. Sprinkler heads & escutcheons are priced separately unless otherwise noted.*

## EC-8C Extended Coverage Light Hazard, QR for Corridors & Hallways Pendent and Recessed Pendent Sprinklers K=8.0, 3/4" N.P.T. ECLH

100 Box Quantity (24 lbs/box) (SIN TY4282)

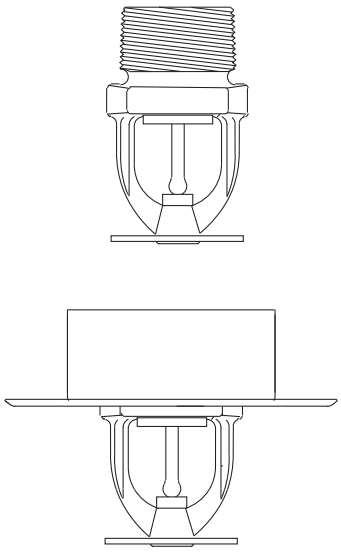

| C.O. | Number | Model | Finish | Temperature | List Price |
|---|---|---|---|---|---|
| | **57-351-1-200** | EC-8C QR | Brass | 200°F (93°C) | $142.11 |
| | **57-351-4-155** | EC-8C QR | Signal White (RAL 9003) | 155°F (68°C) | $115.16 |
| | **57-351-4-200** | EC-8C QR | Signal White (RAL 9003) | 200°F (93°C) | $115.16 |
| | **57-351-5-155** | EC-8C QR | Jet Black (RAL 9005) | 155°F (68°C) | $157.81 |
| | **57-351-5-200** | EC-8C QR | Jet Black (RAL 9005) | 200°F (93°C) | $157.81 |
| | **57-351-9-155** | EC-8C QR | Chrome | 155°F (68°C) | $115.16 |
| | **Recessed Escutcheons (Order Separately)** | | | | |
| ◗ | **56-705-2-011** | 3/4" Brass Recessed (Style 30) | | | $22.65 |
| | **56-705-9-011** | 3/4" Chrome Recessed (Style 30) | | | $9.20 |
| | **56-705-4-011** | 3/4" Signal White (RAL 9003) Recessed (Style 30) | | | $9.20 |
| | **56-700-2-010** | 3/4" Brass Recessed (Style 40) | | | $22.65 |
| | **56-700-9-010** | 3/4" Chrome Recessed (Style 40) | | | $8.47 |
| | **56-700-4-010** | 3/4" Signal White (RAL 9003) Recessed (Style 40) | | | $8.47 |
| | **Sprinkler Wrench** | | | | |
| | **56-000-6-387** | W-Type 6 Wrench | | | $252.89 |
| | **56-850-4-001** | Wrench W-Type 7 (Recessed Only) | | | $427.09 |
| | **Technical Data Sheet: TFP226** | | | | |



*See latest Technical Data Sheets for specific Approvals, Listings, Design Parameters & available finishes. Sprinkler heads & escutcheons are priced separately unless otherwise noted.*

*Items marked **"C.O."** are made to order and may require longer delivery times. Please contact customer service for availability.*

Section 1 Standard Spray Sprinklers
Section 2 Extended Coverage Sprinklers
Section 3 Storage Sprinklers
Section 4 Residential Products
Section 5 Dry Sprinklers
Section 6 Special Sprinklers
Section 7 Nozzles and Sprinkler Accessories

## EC-5 QR Pendent, Recessed Pendent and Sidewall Sprinklers K=5.6, 1/2" N.P.T.

100 Box Quantity (Pendent 15 lbs/box (SIN TY3232), Sidewall 16 lbs/box (SIN TY3302))

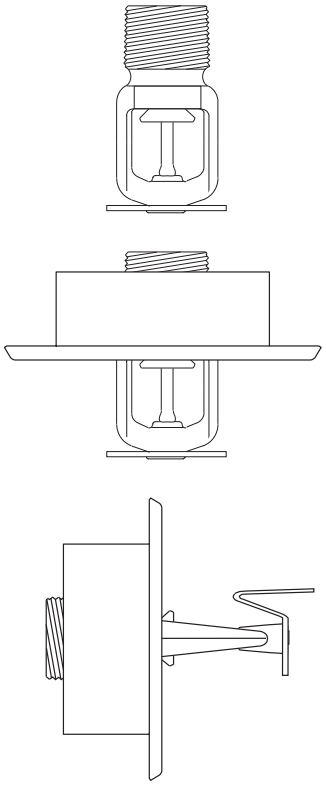

| C.O. | Pendent | Sidewall | Finish | Temperature | List Price |
|---|---|---|---|---|---|
| | **51-051-1-135** | – | Natural Brass | 135°F (57°C) | $110.95 |
| | **51-051-1-155** | **51-053-1-155** | Natural Brass | 155°F (68°C) | $110.95 |
| | – | **51-053-1-200** | Natural Brass | 200°F (93°C) | $110.95 |
| | **51-051-9-135** | **51-053-9-135** | Chrome Plated | 135°F (57°C) | $119.89 |
| | **51-051-9-155** | **51-053-9-155** | Chrome Plated | 155°F (68°C) | $119.89 |
| | – | **51-053-9-200** | Chrome Plated | 200°F (93°C) | $119.89 |
| | **51-051-4-135** | **51-053-4-135** | Signal White (RAL 9003) | 135°F (57°C) | $119.89 |
| | **51-051-4-155** | **51-053-4-155** | Signal White (RAL 9003) | 155°F (68°C) | $119.89 |
| | – | **51-053-4-200** | Signal White (RAL 9003) | 200°F (93°C) | $119.89 |
| | – | **51-053-3-155** | Pure White (RAL 9010) | 155°F (68°C) | $124.02 |
| | – | **51-053-3-200** | Pure White (RAL 9010) | 200°F (93°C) | $124.02 |
| | **Recessed Escutcheons (Order Separately)** | | | | |
| ◗ | **56-711-2-010** | 1/2" Brass Plated Recessed (Style 50) | | | $23.36 |
| | **56-711-9-010** | 1/2" Chrome Plated Recessed (Style 50) | | | $18.74 |
| | **56-711-4-010** | 1/2" Signal White (RAL 9003) Recessed (Style 50) | | | $18.74 |
| | **Sprinkler Wrench** | | | | |
| | **56-000-6-387** | W-Type 6 Wrench | | | $252.89 |
| | **56-850-4-001** | W-Type 7 Wrench (Recessed Only) | | | $427.09 |

**Technical Data Sheet: Pendent-TFP228, Sidewall-TFP298**

*Items marked **"C.O."** are made to order and may require longer delivery times. Please contact customer service for availability.*

*See latest Technical Data Sheets for specific Approvals, Listings, Design Parameters & available finishes. Sprinkler heads & escutcheons are priced separately unless otherwise noted.*

## Model ESFR-34, K=33.6, 1-¼" NPT, Early Suppression, Fast Response Sprinkler

30 Box Quantity (24 lbs/box) (SIN TY9286)

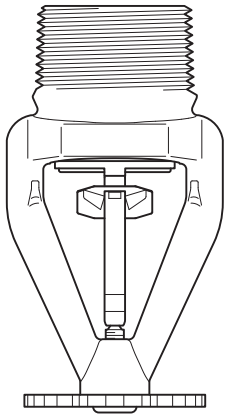

| C.O. | Pendent | Description | Temperature | Price |
|---|---|---|---|---|
| | **51-681-1-165** | Brass - NPT Thread | 165°F (74°C) | $230.74 |
| | **51-681-1-212** | Brass - NPT Thread | 212°F (100°C) | $230.74 |
| | **Sprinkler Wrench** | | | |
| | **56-341-1-001** | W-Type 26 Wrench | | $322.38 |

**Technical Data Sheet: TFP338**

## Model ESFR-25, K=25.2, 1" NPT, Early Suppression, Fast Response Sprinkler

50 Box Quantity (23 lbs/box) (SIN TY9226)

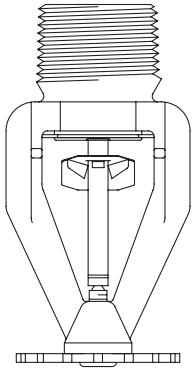

| C.O. | Pendent | Description | Temperature | Price |
|---|---|---|---|---|
| | **58-441-1-165** | Brass - NPT Thread | 165°F (74°C) | $108.44 |
| | **58-441-1-214** | Brass - NPT Thread | 212°F (100°C) | $108.44 |
| | **Sprinkler Wrench** | | | |
| | **56-872-1-025** | W-Type 1 Wrench | | $319.17 |
| | **Sprinkler Guard** | | | |
| | **56-949-1-025** | EG-25 Red - NPT Threads | | $38.43 |
| | **56-949-9-025** | EG-25 Zinc Chromate - NPT Threads | | $52.57 |

**Technical Data Sheet:**
**ESFR-25 - TFP312**
**Guards - TFP784**



*See latest Technical Data Sheets for specific Approvals, Listings, Design Parameters & available finishes. Sprinkler heads & escutcheons are priced separately unless otherwise noted.*

*Items marked **"C.O."** are made to order and may require longer delivery times. Please contact customer service for availability.*

Section 1 Standard Spray Sprinklers
Section 2 Extended Coverage Sprinklers
Section 3 Storage Sprinklers
Section 4 Residential Products
Section 5 Dry Sprinklers
Section 6 Special Sprinklers
Section 7 Nozzles and Sprinkler Accessories

## Model EC-25, K=25.2, 1" NPT, Upright, Area/Density, Extended Coverage (SIN TY9128)

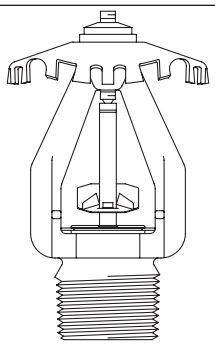

SIN TY9128

| C.O. | Upright | Description | Temperature | List Price |
|---|---|---|---|---|
| | **58-450-1-165** | Brass - NPT Thread | 165°F (74°C) | $166.05 |
| | **58-450-1-214** | Brass - NPT Thread | 212°F (100°C) | $166.05 |
| | **Sprinkler Wrench** | | | |
| | **56-872-1-025** | W-Type 1 Wrench | | $319.17 |

**Technical Data Sheet: TFP213**

## ESFR-22, K=22.4, 1" NPT, Early Suppression, Fast Response Pendent Sprinkler

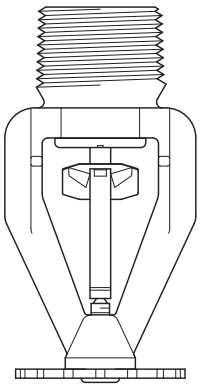

50 Box Quantity (23 lbs/box) (SIN TY8223)

| C.O. | Pendent | Description | Temperature | Price |
|---|---|---|---|---|
| | **58-464-1-165** | Natural Brass | 165°F (74°C) | $108.44 |
| | **58-464-1-212** | Natural Brass | 212°F (100°C) | $108.44 |
| | **Sprinkler Wrench** | | | |
| | **56-872-1-025** | Wrench W-Type 1 ESFR | | $319.17 |
| | **Sprinkler Guard** | | | |
| | **56-949-1-025** | EG-25 Red - NPT Threads | | $38.43 |
| | **56-949-9-025** | EG-25 Zinc Chromate - NPT Threads | | $52.57 |

**Technical Data Sheet:**
**ESFR-22 - TFP321**
**EG-25 Guards - TFP784**

*Items marked **"C.O."** are made to order and may require longer delivery times. Please contact customer service for availability.*

*See latest Technical Data Sheets for specific Approvals, Listings, Design Parameters & available finishes. Sprinkler heads & escutcheons are priced separately unless otherwise noted.*

## ESFR-17,K=16.8, 3/4" NPT, Early Suppression, Fast Response Upright Sprinkler

50 Box Quantity (20 lbs/box) (SIN TY7126)

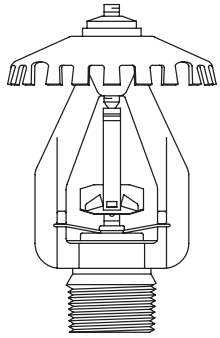

| C.O. | Upright | Description | Temperature | Price |
|---|---|---|---|---|
| | **58-447-1-165** | Brass | 165°F (74°C) | $164.20 |
| | **58-447-1-214** | Brass | 212°F (100°C) | $164.20 |
| | **Sprinkler Wrench** | | | |
| | **56-001-0-686** | W-Type 21 Wrench | | $252.89 |

**Technical Data Sheet: TFP316**

## ESFR-17, K=16.8, 3/4" NPT, Early Suppression, Fast Response Pendent Sprinkler

50 Box Quantity (20 lbs/box) (SIN TY7223)

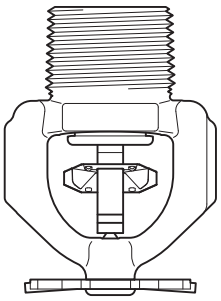

| C.O. | Pendent | Description | Temperature | Price |
|---|---|---|---|---|
| | **58-457-1-165** | Natural Brass | 165°F (74°C) | $59.61 |
| | **58-457-1-214** | Natural Brass | 212°F (100°C) | $59.61 |
| | **Sprinkler Wrench** | | | |
| | **56-463-1-001** | Wrench W-Type 35 ESFR Pendent | | $428.52 |

**Technical Data Sheet: TFP317**

## ESFR-17, 3mm Bulb, K=16.8, 3/4" NPT, Early Suppression, Fast Response Pendent Sprinkler

50 Box Quantity (20 lbs/box) (SIN TY7236)

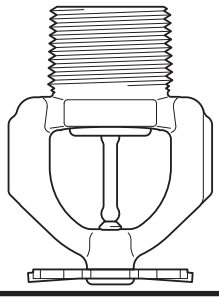

| C.O. | Pendent | Description | Temperature | Price |
|---|---|---|---|---|
| | **58-462-1-155** | NPT Threads - Natural Brass | 155°F (68°C) | $44.25 |
| | **58-462-1-205** | NPT Threads - Natural Brass | 205°F (96°C) | $44.25 |
| | **Sprinkler Wrench** | | | |
| | **56-463-1-001** | Wrench W-Type 35 ESFR Pendent | | $428.52 |

**Technical Data Sheet: TFP322**



*See latest Technical Data Sheets for specific Approvals, Listings, Design Parameters & available finishes. Sprinkler heads & escutcheons are priced separately unless otherwise noted.*

*Items marked **"C.O."** are made to order and may require longer delivery times. Please contact customer service for availability.*

Section 1 Standard Spray Sprinklers
Section 2 Extended Coverage Sprinklers
Section 3 Storage Sprinklers
Section 4 Residential Products
Section 5 Dry Sprinklers
Section 6 Special Sprinklers
Section 7 Nozzles and Sprinkler Accessories

## ESFR-17 & ESFR-25, 1-1/4" NPT Threaded or 2" Grooved Connection, Dry-Type Pendent Early Suppression, Fast Response Sprinkler

(K=16.8 SIN TY7229, K=25.2 SIN TY9229)

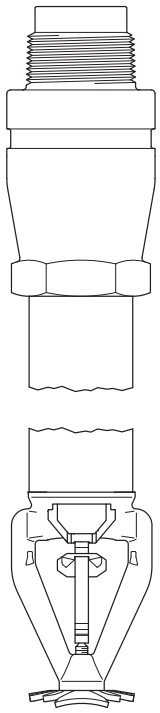

(Note: includes two insulating sealing assemblies)

| C.O. | Pendent | Description | K-Factor | Temperature | Price |
|---|---|---|---|---|---|
| | | **36" Sprinkler** | | | |
| | **61-441-1-360** | NPT Threads - 36" Brass with Grooved | 16.8 | 165°F (74°C) | $1,442.80 |
| | **61-442-1-360** | NPT Threads - 36" Brass with Grooved | 16.8 | 212°F (100°C) | $1,442.80 |
| | **61-541-1-360** | NPT Threads - 36" Brass with Grooved | 25.2 | 165°F (74°C) | $2,796.05 |
| | **61-542-1-360** | NPT Threads - 36" Brass with Grooved | 25.2 | 212°F (100°C) | $2,796.05 |
| | | **30" Sprinkler** | | | |
| | **61-441-1-300** | 30" Brass with Grooved/NPT Threads | 16.8 | 165°F (74°C) | $1,442.80 |
| | **61-442-1-300** | 30" Brass with Grooved/NPT Threads | 16.8 | 212°F (100°C) | $1,442.80 |
| | **61-541-1-300** | 30" Brass with Grooved/NPT Threads | 25.2 | 165°F (74°C) | $2,796.05 |
| | **61-542-1-300** | 30" Brass with Grooved/NPT Threads | 25.2 | 212°F (100°C) | $2,796.05 |
| | | **23" Sprinkler** | | | |
| | **61-441-1-230** | 23" Brass with Grooved/NPT Threads | 16.8 | 165°F (74°C) | $1,442.80 |
| | **61-442-1-230** | 23" Brass with Grooved/NPT Threads | 16.8 | 212°F (100°C) | $1,442.80 |
| | **61-541-1-230** | 23" Brass with Grooved/NPT Threads | 25.2 | 165°F (74°C) | $2,796.05 |
| | **61-542-1-230** | 23" Brass with Grooved/NPT Threads | 25.2 | 212°F (100°C) | $2,796.05 |
| | | **Replacement Parts** | | | |
| | **91-106-1-500** | Replacement Insulating Sealing Assembly | | | $139.24 |
| | | **Sprinkler Wrench** | | | |
| | **56-341-1-001** | W-Type 26 Wrench | | | $322.38 |

**Technical Data Sheet: K=16.8 TFP320, K=25.2 TFP329**

## Model ESFR-14, K=14.0, 3/4" NPT, Early Suppression, Fast Response Sprinkler

50 Box Quantity (21 lbs/box) (SIN TY6236)

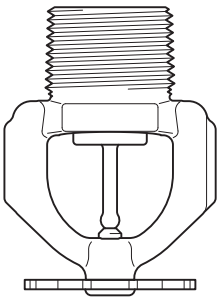

| C.O. | Pendent | Description | Temperature | Price |
|---|---|---|---|---|
| | **58-449-1-155** | Brass | 155°F (68°C) | $60.41 |
| | **58-449-1-200** | Brass | 200°F (93°C) | $60.41 |
| | | **Sprinkler Wrench** | | |
| | **56-462-1-001** | W-Type 34 Wrench | | $409.50 |

**Technical Data Sheet: TFP319**

*Items marked **"C.O."** are made to order and may require longer delivery times. Please contact customer service for availability.*

*See latest Technical Data Sheets for specific Approvals, Listings, Design Parameters & available finishes. Sprinkler heads & escutcheons are priced separately unless otherwise noted.*

## Ultra K17, Upright, K=16.8, 3/4" NPT, Control Mode Specific Application Sprinkler

50 Box Quantity (18 lbs/box) (SIN TY7153)

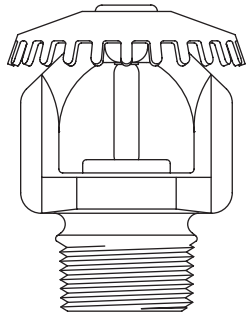

| C.O. | Upright | Description | Temperature | Price |
|---|---|---|---|---|
| | **51-887-1-155** | Natural Brass | 155°F (68°C) | $190.50 |
| | **51-887-1-200** | Natural Brass | 200°F (93°C) | $190.50 |
| | **Sprinkler Wrench** | | | |
| | **56-892-1-001** | W-Type 8 Wrench | | $424.81 |

**Technical Data Sheet: TFP330**

## Model K17-231, K=16.8, 3/4" Thread, Upright Sprinkler

50 Box Quantity (18 lbs/box) (SIN TY7151)

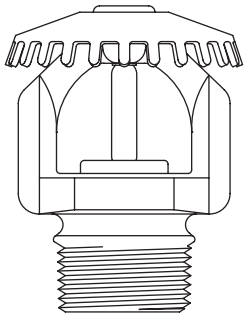

| C.O. | Upright | Description | Temperature | Price |
|---|---|---|---|---|
| | **51-888-1-155** | Brass | 155°F (68°C) | $109.41 |
| | **51-888-1-200** | Brass | 200°F (93°C) | $109.41 |
| | **51-888-1-286** | Brass | 286°F (141°C) | $109.41 |
| | **Sprinkler Wrench** | | | |
| | **56-892-1-001** | W-Type 8 Wrench | | $424.81 |

**Technical Data Sheet: TFP332**

## Model K17-231, K=16.8, 3/4" Thread, Pendent Sprinkler

50 Box Quantity (18 lbs/box) (SIN TY7251)

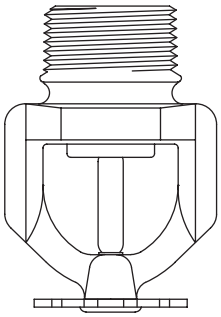

| C.O. | Pendent | Description | Temperature | Price |
|---|---|---|---|---|
| | **51-889-1-155** | Brass | 155°F (68°C) | $116.21 |
| | **51-889-1-200** | Brass | 200°F (93°C) | $116.21 |
| | **51-889-1-286** | Brass | 286°F (141°C) | $116.21 |
| | **Sprinkler Wrench** | | | |
| | **56-892-1-001** | W-Type 8 Wrench | | $424.81 |

**Technical Data Sheet: TFP332**



*See latest Technical Data Sheets for specific Approvals, Listings, Design Parameters & available finishes. Sprinkler heads & escutcheons are priced separately unless otherwise noted.*

*Items marked **"C.O."** are made to order and may require longer delivery times. Please contact customer service for availability.*

Section 1 Standard Spray Sprinklers
Section 2 Extended Coverage Sprinklers
Section 3 Storage Sprinklers
Section 4 Residential Products
Section 5 Dry Sprinklers
Section 6 Special Sprinklers
Section 7 Nozzles and Sprinkler Accessories

## Model ELO-231, Standard Response, Upright and Pendent Sprinklers K=11.2, 1/2" & 3/4" NPT

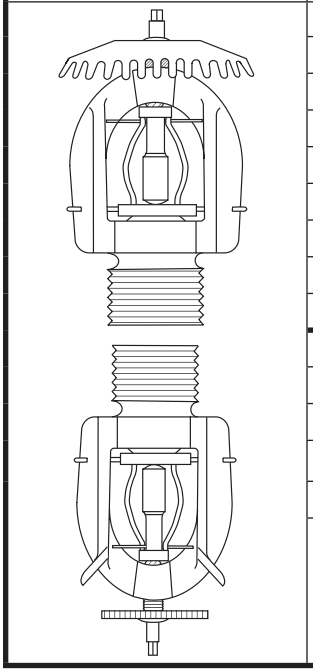

50 Box Quantity (19 lbs/box) - Upright (SIN-TY5111), Pendent (SIN-TY5211), Upright - 1/2 NPT - (SIN-TY5811)

| C.O. | Upright | Pendent | Model | Finish | Temperature | List Price |
|---|---|---|---|---|---|---|
| | **50-110-1-165** | **50-112-1-165** | ELO-231 x 3/4 | Brass | 165°F (74°C) | $115.45 |
| | **50-110-1-212** | **50-112-1-212** | ELO-231 x 3/4 | Brass | 212°F (100°C) | $115.45 |
| | **50-110-1-286** | **50-112-1-286** | ELO-231 x 3/4 | Brass | 286°F (141°C) | $115.45 |
| ◗ | **50-110-9-165** | **50-112-9-165** | ELO-231 x 3/4 | Chrome Plated | 165°F (74°C) | $213.65 |
| ◗ | **50-110-9-212** | **50-112-9-212** | ELO-231 x 3/4 | Chrome Plated | 212°F (100°C) | $213.65 |
| ◗ | **50-110-9-286** | **50-112-9-286** | ELO-231 x 3/4 | Chrome Plated | 286°F (141°C) | $213.65 |
| ◗ | **50-110-6-165** | **50-112-6-165** | ELO-231 x 3/4 | Wax Coated | 165°F (74°C) | $115.47 |
| ◗ | **50-110-6-212** | **50-112-6-212** | ELO-231 x 3/4 | Wax Coated | 212°F (100°C) | $115.47 |
| ◗ | **50-110-6-286** | **50-112-6-286** | ELO-231 x 3/4 | Wax Coated | 286°F (141°C) | $115.47 |
| ◗ | **50-210-1-165** | – | ELO-231 x 1/2 | Brass | 165°F (74°C) | $196.45 |
| ◗ | **50-210-1-212** | – | ELO-231 x 1/2 | Brass | 212°F (100°C) | $196.45 |
| ◗ | **50-210-1-286** | – | ELO-231 x 1/2 | Brass | 286°F (141°C) | $196.45 |
| | **Sprinkler Wrench** | | | | | |
| | **56-895-1-001** | | W-Type 3 Wrench | | | $349.96 |

**Technical Data Sheet: TFP340**

*Items marked **"C.O."** are made to order and may require longer delivery times. Please contact customer service for availability.*

*See latest Technical Data Sheets for specific Approvals, Listings, Design Parameters & available finishes. Sprinkler heads & escutcheons are priced separately unless otherwise noted.*

## Model ELO-231B, Standard Response, Upright and Pendent Sprinklers K=11.2, 1/2" & 3/4" NPT

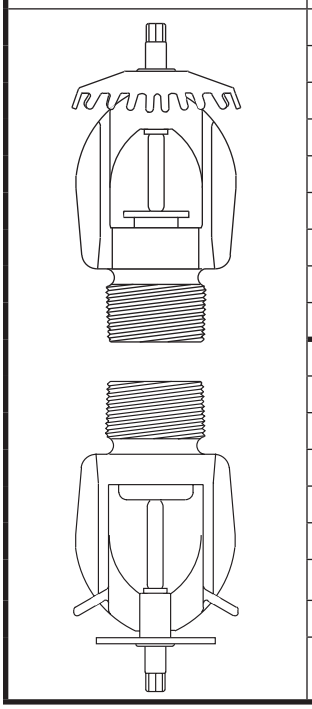

50 Box Quantity (19 lbs/box) - Upright (SIN-TY5151), Pendent (SIN-TY5251), Upright - 1/2 NPT - (SIN-TY5851)

| C.O. | Upright | Pendent | Model | Finish | Temperature | List Price |
|---|---|---|---|---|---|---|
| | **50-510-1-155** | **50-512-1-155** | ELO-231B x 3/4 | Brass | 155°F (68°C) | $76.57 |
| | **50-510-1-200** | **50-512-1-200** | ELO-231B x 3/4 | Brass | 200°F (93°C) | $76.57 |
| | **50-510-1-286** | **50-512-1-286** | ELO-231B x 3/4 | Brass | 286°F (141°C) | $76.57 |
| ◗ | **50-510-9-155** | **50-512-9-155** | ELO-231B x 3/4 | Chrome Plated | 155°F (68°C) | $169.85 |
| ◗ | **50-510-9-200** | **50-512-9-200** | ELO-231B x 3/4 | Chrome Plated | 200°F (93°C) | $169.85 |
| ◗ | **50-510-9-286** | **50-512-9-286** | ELO-231B x 3/4 | Chrome Plated | 286°F (141°C) | $169.85 |
| ◗ | **50-510-6-155** | **50-512-6-155** | ELO-231B x 3/4 | Wax Coated | 155°F (68°C) | $274.59 |
| ◗ | **50-510-6-200** | **50-512-6-200** | ELO-231B x 3/4 | Wax Coated | 200°F (93°C) | $274.59 |
| ◗ | **50-510-6-286** | **50-512-6-286** | ELO-231B x 3/4 | Wax Coated | 286°F (141°C) | $274.59 |
| ◗ | **50-501-1-155** | – | ELO-231B x 1/2 | Brass | 155°F (68°C) | $130.64 |
| ◗ | **50-501-1-200** | – | ELO-231B x 1/2 | Brass | 200°F (93°C) | $130.64 |
| ◗ | **50-501-1-286** | – | ELO-231B x 1/2 | Brass | 286°F (141°C) | $130.64 |
| ◗ | **50-501-9-155** | – | ELO-231B x 1/2 | Chrome Plated | 165°F (74°C) | $237.33 |
| ◗ | **50-501-9-200** | – | ELO-231B x 1/2 | Chrome Plated | 212°F (100°C) | $237.33 |
| ◗ | **50-501-9-286** | – | ELO-231B x 1/2 | Chrome Plated | 286°F (141°C) | $237.33 |
| | **Sprinkler Wrench** | | | | | |
| | **56-895-1-001** | | W-Type 3 Wrench | | | $349.96 |
| | **Technical Data Sheet: TFP342** | | | | | |



*See latest Technical Data Sheets for specific Approvals, Listings, Design Parameters & available finishes. Sprinkler heads & escutcheons are priced separately unless otherwise noted.*

*Items marked **"C.O."** are made to order and may require longer delivery times. Please contact customer service for availability.*

Section 1 Standard Spray Sprinklers
Section 2 Extended Coverage Sprinklers
Section 3 Storage Sprinklers
Section 4 Residential Products
Section 5 Dry Sprinklers
Section 6 Special Sprinklers
Section 7 Nozzles and Sprinkler Accessories

## ELO-231 FRB, Quick Response, Upright, Pendent Sprinklers K=11.2, 3/4" NPT

50 Box Quantity (19 lbs/box) (SIN Upright TY5131) (SIN Pendent TY5231)

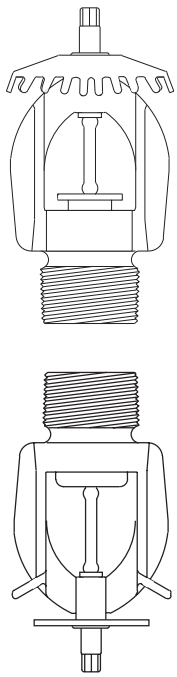

| C.O. | Upright | Pendent | Model | Finis | Temperature | List Price |
|---|---|---|---|---|---|---|
| | **3/4" NPT** | | | | | |
| | **50-500-1-155** | **50-502-1-155** | ELO-231FRB | Brass | 155°F (68°C) | $88.54 |
| | **50-500-1-200** | **50-502-1-200** | ELO-231FRB | Brass | 200°F (93°C) | $88.54 |
| | **50-500-1-286** | **50-502-1-286** | ELO-231FRB | Brass | 286°F (141°C) | $88.54 |
| | **50-500-9-155** | **50-502-9-155** | ELO-231FRB | Chrome Plated | 155°F (68°C) | $147.70 |
| | **50-500-9-200** | **50-502-9-200** | ELO-231FRB | Chrome Plated | 200°F (93°C) | $147.70 |
| | **50-500-9-286** | **50-502-9-286** | ELO-231FRB | Chrome Plated | 286°F (141°C) | $147.70 |
| | **50-500-4-286** | | ELO-231FRB | White | 286°F (141°C) | $88.54 |
| | **1/2" NPT** | | | | | |
| | **50-503-1-155** | -- | ELO-231FRB | Brass | 155°F (68°C) | $110.77 |
| | **50-503-1-200** | -- | ELO-231FRB | Brass | 200°F (93°C) | $114.88 |
| | **Sprinkler Wrench** | | | | | |
| | **56-895-1-001** | | W-Type 3 Wrench | | | $349.96 |

**Technical Data Sheet: TFP344**

## Model LD - Large Drop Upright Sprinklers, K=11.2, 3/4" NPT
## Standard Response, Control Mode Specific Application

50 Box Quantity (19 lbs/box) (SIN TY5153)

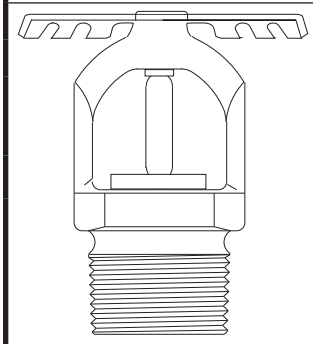

| C.O. | Upright | Model | Finis | Temperature | List Price |
|---|---|---|---|---|---|
| | **50-400-2-155** | LD Large Drop | Natural Brass | 155°F (68°C) | $207.02 |
| | **50-400-2-200** | LD Large Drop | Natural Brass | 200°F (93°C) | $207.02 |
| | **50-400-2-286** | LD Large Drop | Natural Brass | 286°F (141°C) | $207.02 |
| | **Sprinkler Wrench** | | | | |
| | **56-895-1-001** | W-Type 3 Wrench | | | $349.96 |

**Technical Data Sheet: TFP335**

*Items marked **"C.O."** are made to order and may require longer delivery times. Please contact customer service for availability.*

*See latest Technical Data Sheets for specific Approvals, Listings, Design Parameters & available finishes. Sprinkler heads & escutcheons are priced separately unless otherwise noted.*

## TY-B, 5mm Bulb, K=5.6, 1/2" NPT, Standard Response, Intermediate Level Upright Sprinklers w/Shield

50 Box Quantity (28 lbs/box) (Upright - SIN TY3153)

Upright
Factory Assembled

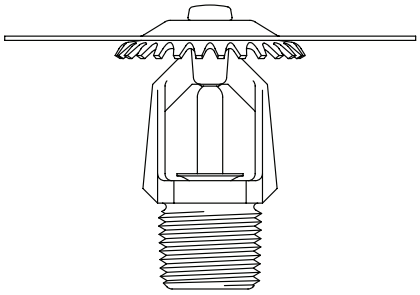

| C.O. | Upright w/Shield | Description | Temperature | List Price |
|---|---|---|---|---|
| ◗ | **57-533-1-135** | Brass | 135°F (57°C) | $85.61 |
| | **57-533-1-155** | Brass | 155°F (68°C) | $85.61 |
| ◗ | **57-533-1-175** | Brass | 175°F (79°C) | $85.61 |
| | **57-533-1-200** | Brass | 200°F (93°C) | $85.61 |
| | **57-533-1-286** | Brass | 286°F (141°C) | $85.61 |
| ◗ | **57-533-1-360** | Brass | 360°F (182°C) | $85.61 |
| | **Sprinkler Wrench** | | | |
| | **56-000-6-387** | W-Type 6 Wrench | | $252.89 |

**Technical Data Sheet: TFP351**

## TY-B, 5mm Bulb, K=8.0, 3/4" NPT, Standard Response, Intermediate Level Upright Sprinkler w/Shield

50 Box Quantity (30 lbs/box) (Upright - SIN TY4153)

Upright
Factory Assembled

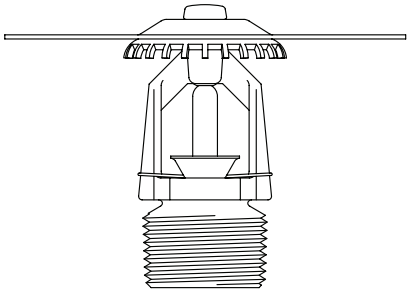

| C.O. | Upright w/Shield | Finish | Temperature | List Price |
|---|---|---|---|---|
| ◗ | **57-543-1-135** | Brass | 135°F (57°C) | $66.67 |
| | **57-543-1-155** | Brass | 155°F (68°C) | $66.67 |
| ◗ | **57-543-1-175** | Brass | 175°F (79°C) | $66.67 |
| | **57-543-1-200** | Brass | 200°F (93°C) | $66.67 |
| | **57-543-1-286** | Brass | 286°F (141°C) | $66.67 |
| ◗ | **57-543-1-360** | Brass | 360°F (182°C) | $66.67 |
| | **Sprinkler Wrench** | | | |
| | **56-000-6-387** | W-Type 6 Wrench | | $252.89 |

**Technical Data Sheet: TFP351**



*See latest Technical Data Sheets for specific Approvals, Listings, Design Parameters & available finishes. Sprinkler heads & escutcheons are priced separately unless otherwise noted.*

*Items marked **"C.O."** are made to order and may require longer delivery times. Please contact customer service for availability.*

Section 1 Standard Spray Sprinklers
Section 2 Extended Coverage Sprinklers
Section 3 Storage Sprinklers
Section 4 Residential Products
Section 5 Dry Sprinklers
Section 6 Special Sprinklers
Section 7 Nozzles and Sprinkler Accessories

## TY-FRB, 3mm Bulb,K=5.6, 1/2" NPT, Quick Response, Intermediate Level Upright Sprinklers w/Shield

50 Box Quantity (28 lbs/box) - (Upright - SIN TY3133),

Upright
Factory Assembled

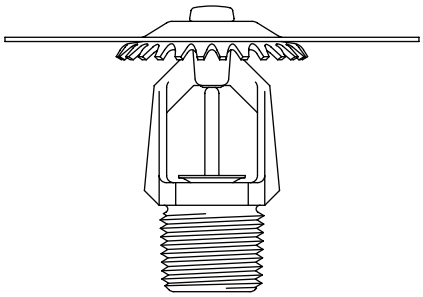

| C.O. | Upright w/Shield | Description | Temperature | Price |
|---|---|---|---|---|
| ◗ | **57-333-1-135** | Brass | 135°F (57°C) | $111.73 |
| | **57-333-1-155** | Brass | 155°F (68°C) | $111.71 |
| ◗ | **57-333-1-175** | Brass | 175°F (79°C) | $111.71 |
| | **57-333-1-200** | Brass | 200°F (93°C) | $111.71 |
| | **57-333-1-286** | Brass | 286°F (141°C) | $111.71 |
| | | **Sprinkler Wrench** | | |
| | **56-000-6-387** | W-Type 6 Wrench | | $252.89 |

**Technical Data Sheet: TFP356**

## TY-FRB, 3mm Bulb, K=8.0, 3/4" NPT Quick Response, Intermediate Level Upright Sprinklers w/Shield

50 Box Quantity (30 lbs/box) - (Upright - SIN TY4133)

Upright
Factory Assembled

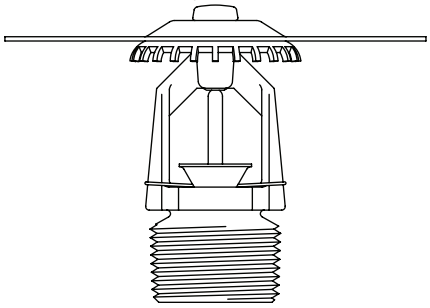

| C.O. | Upright w/Shield | Description | Temperature | Price |
|---|---|---|---|---|
| ◗ | **57-343-1-135** | Brass | 135°F (57°C) | $98.12 |
| | **57-343-1-155** | Brass | 155°F (68°C) | $98.12 |
| ◗ | **57-343-1-175** | Brass | 175°F (79°C) | $98.12 |
| | **57-343-1-200** | Brass | 200°F (93°C) | $98.12 |
| | **57-343-1-286** | Brass | 286°F (141°C) | $98.12 |
| | | **Sprinkler Wrench** | | |
| | **56-000-6-387** | W-Type 6 Wrench | | $252.89 |

**Technical Data Sheet: TFP356**

*Items marked **"C.O."** are made to order and may require longer delivery times. Please contact customer service for availability.*

*See latest Technical Data Sheets for specific Approvals, Listings, Design Parameters & available finishes. Sprinkler heads & escutcheons are priced separately unless otherwise noted.*

## TY-L, K=5.6, 1/2" NPT, Standard Response
## Intermediate Level Upright and Pendent Sprinklers w/Shield

(Upright - SIN TY3113), (Pendent - SIN TY3211)

Upright
Factory Assembled

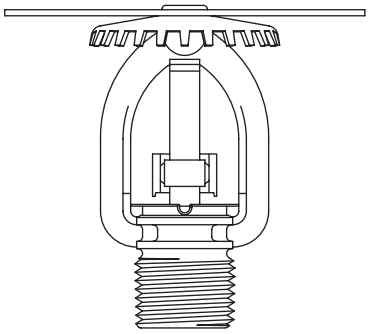

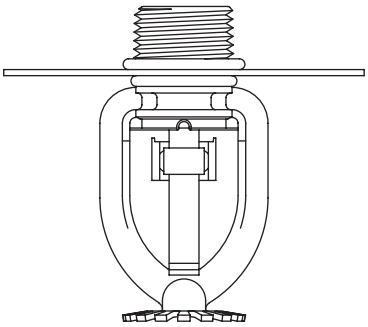

*Pendent Shown Field Assembled
(Order 53-112-X-XXX Sprinkler
and Shield Assembly Separately)

| C.O. | Upright w/Shield | Description | Temperature | Price |
|---|---|---|---|---|
| | **53-253-1-165** | Brass | 165°F (74°C) | $95.96 |
| ◗ | **53-253-1-212** | Brass | 212°F (100°C) | $95.96 |
| | **53-253-1-280** | Brass | 280°F (138°C) | $95.96 |

### Pendent Version

**For pendent TY-L with Shield**, order the pendent TY-L sprinkler (53-112-X-XXX See Page 1-1) and the deflector shield and O-Ring Assembly separately

| | | | |
|---|---|---|---|
| | **56-015-6-802** | 1/2" TY-L Shield Package (Shield/O-Ring) | $25.11 |

### Sprinkler Wrench

| | | | |
|---|---|---|---|
| | **56-000-1-849** | W-Type 9 Wrench | $230.03 |

**Technical Data Sheet: TFP350**

Section 1 Standard Spray Sprinklers
Section 2 Extended Coverage Sprinklers
Section 3 Storage Sprinklers
Section 4 Residential Products
Section 5 Dry Sprinklers
Section 6 Special Sprinklers
Section 7 Nozzles and Sprinkler Accessories

## TY-L, K=8.0, 3/4" NPT, Standard Response Intermediate Level Upright Sprinklers w/Shield

(Upright - SIN TY4113),

Upright
Factory Assembled

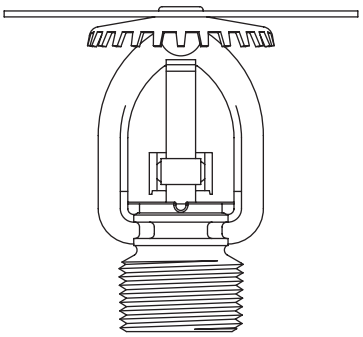

| C.O. | Upright w/Shield | Description | Temperature | Price |
|---|---|---|---|---|
| | **53-153-1-165** | Brass | 165°F (74°C) | $133.35 |
| ◗ | **53-153-1-212** | Brass | 212°F (100°C) | $133.35 |
| | **53-153-1-280** | Brass | 280°F (138°C) | $133.35 |
| | **Sprinkler Wrench** | | | |
| | **56-000-1-849** | W-Type 9 Wrench | | $230.03 |

**Technical Data Sheet: TFP350**

*Items marked **"C.O."** are made to order and may require longer delivery times. Please contact customer service for availability.*

*See latest Technical Data Sheets for specific Approvals, Listings, Design Parameters & available finishes. Sprinkler heads & escutcheons are priced separately unless otherwise noted.*

## TY-FRL, K=5.6, 1/2" Male NPT, Quick Response, Intermediate Level Upright and Pendent Sprinkler w/Shield

(Upright - SIN TY3123), (Pendent - SIN TY3221)

Upright
Factory Assembled

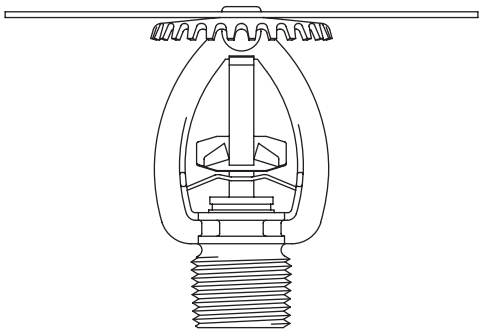

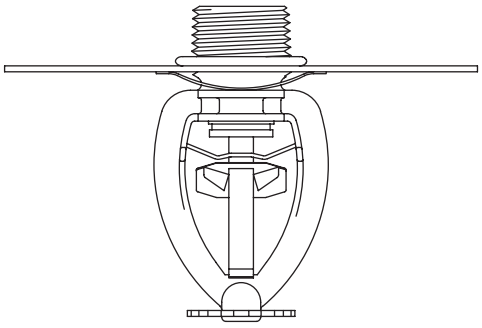

*Pendent Shown Field Assembled
(Order 58-982-X-XXX Sprinkler
and Shield Assembly Separately)

| C.O. | Upright w/Shield | Description | Temperature | Price |
|---|---|---|---|---|
| | **58-986-1-165** | Brass | 165°F (74°C) | $182.50 |
| | **Pendent Version** | | | |
| | **For pendent TY-FRL with Shield**, order the pendent TY-FRL sprinkler (58-982-X-XXX) see page 1-5 and the deflector shield and O-Ring Assembly separately | | | |
| | **56-952-1-001** | Brass 1/2" NPT, Pendent Shield /O-Ring/Speed Nut assembly | | $21.89 |
| | **Sprinkler Wrench** | | | |
| | **56-000-1-849** | W-Type 9 Wrench | | $230.03 |

**Technical Data Sheet: TFP355**

Section 1 Standard Spray Sprinklers
Section 2 Extended Coverage Sprinklers
Section 3 Storage Sprinklers
Section 4 Residential Products
Section 5 Dry Sprinklers
Section 6 Special Sprinklers
Section 7 Nozzles and Sprinkler Accessories

## TY-FRL, K=8.0, 3/4" NPT, Quick Response, Intermediate Level Upright and Pendent Sprinkler w/Shield

(Upright - SIN TY4123), (Pendent - SIN TY4221)

Upright
Factory Assembled

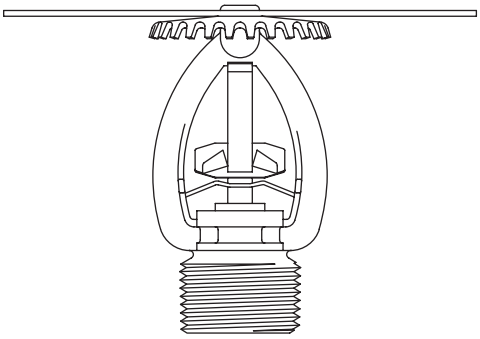

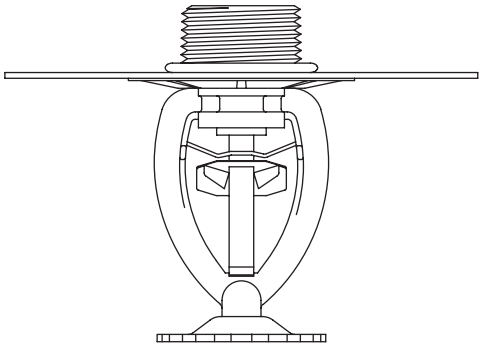

*Pendent Shown Field Assembled
(Order 58-172-X-XXX Sprinkler
and Shield Assembly Separately)

| C.O. | Upright w/Shield | Description | Temperature | Price |
|---|---|---|---|---|
| | **58-153-1-165** | Brass | 165°F (74°C) | $176.15 |
| ◗ | **58-153-9-165** | Chrome | 165°F (74°C) | $211.64 |
| | **Pendent Version** | | | |
| | **For pendent TY-FRL with Shield**, order the pendent TY-FRL sprinkler (58-172-X-XXX) see page 1-6 and the deflector shield and O-Ring Assembly separately | | | |
| | **56-152-1-001** | 3/4" Shield Assy. Brass/O-Ring/Speed Nut | | $35.03 |
| | **Sprinkler Wrench** | | | |
| | **56-000-1-849** | W-Type 9 Wrench | | $230.03 |

**Technical Data Sheet: TFP355**

*Items marked **"C.O."** are made to order and may require longer delivery times. Please contact customer service for availability.*

*See latest Technical Data Sheets for specific Approvals, Listings, Design Parameters & available finishes. Sprinkler heads & escutcheons are priced separately unless otherwise noted.*

## LF II - Low Flow Pendent, Fast Response, K=3.0 1/2" N.P.T.

100 Box Quantity (Pendent 20 lbs/box (SIN TY1234)

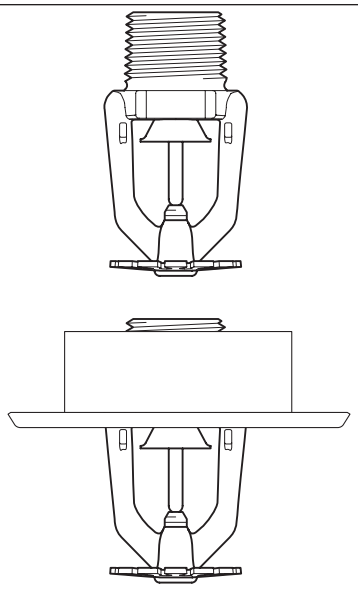

| C.O. | Number | Model | Finish | Temperature | List Price |
|---|---|---|---|---|---|
| | **51-010-1-155** | LFII Pendent | Brass | 155°F (68°C) | $92.47 |
| | **51-010-1-175** | LFII Pendent | Brass | 175°F (79°C) | $92.47 |
| | **51-010-9-155** | LFII Pendent | Chrome | 155°F (68°C) | $70.86 |
| | **51-010-9-175** | LFII Pendent | Chrome | 175°F (79°C) | $70.86 |
| | **51-010-4-155** | LFII Pendent | Signal White (RAL 9003) | 155°F (68°C) | $70.86 |
| | **51-010-4-175** | LFII Pendent | Signal White (RAL 9003) | 175°F (79°C) | $70.86 |
| | **Recessed Escutcheons (Order Separately)** | | | | |
| ◗ | **56-705-2-010** | 1/2" Bright Brass (Style 20) | | | $22.65 |
| | **56-705-9-010** | 1/2" Chrome Plated (Style 20) | | | $6.30 |
| | **56-705-4-010** | 1/2" Signal White (RAL 9003) (Style 20) | | | $6.30 |
| | **Sprinkler Wrench** | | | | |
| | **56-000-6-387** | W-Type 6 Wrench | | | $252.89 |
| | **56-850-4-001** | W-Type 7 Wrench (Recessed Only) | | | $427.09 |

**Technical Data Sheet: Pendent TFP402, Design Guide: TFP490**

## LF II - Low Flow Horizontal Sidewall, K=4.2(HSW), 1/2" N.P.T.

100 Box Quantity HSW 19 lbs/box (SIN TY1334))

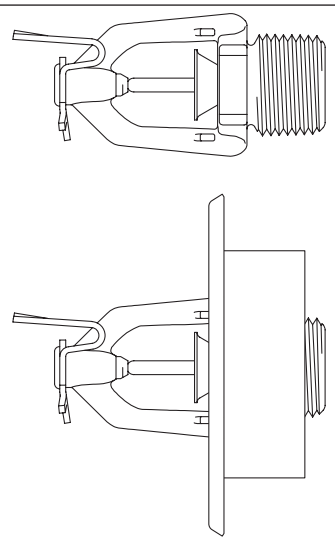

| C.O. | Number | Model | Finish | Temperature | List Price |
|---|---|---|---|---|---|
| | **51-211-1-155** | LFII Sidewall | Brass | 155°F (68°C) | $48.25 |
| ◗ | **51-211-1-175** | LFII Sidewall | Brass | 175°F (79°C) | $48.25 |
| | **51-211-9-155** | LFII Sidewall | Chrome | 155°F (68°C) | $48.25 |
| ◗ | **51-211-9-175** | LFII Sidewall | Chrome | 175°F (79°C) | $48.25 |
| | **51-211-4-155** | LFII Sidewall | Signal White (RAL 9003) | 155°F (68°C) | $48.25 |
| ◗ | **51-211-4-175** | LFII Sidewall | Signal White (RAL 9003) | 175°F (79°C) | $48.25 |
| | **Recessed Escutcheons (Order Separately)** | | | | |
| ◗ | **56-705-2-010** | 1/2" Bright Brass (Style 20) | | | $22.65 |
| | **56-705-9-010** | 1/2" Chrome Plated (Style 20) | | | $6.30 |
| | **56-705-4-010** | 1/2" Signal White (RAL 9003) (Style 20) | | | $6.30 |
| | **Sprinkler Wrench** | | | | |
| | **56-000-6-387** | W-Type 6 Wrench | | | $252.89 |
| | **56-850-4-001** | W-Type 7 Wrench (Recessed Only) | | | $427.09 |

**Technical Data Sheet: TFP410, Design Guide: TFP490**



*See latest Technical Data Sheets for specific Approvals, Listings, Design Parameters & available finishes. Sprinkler heads & escutcheons are priced separately unless otherwise noted.*

*Items marked **"C.O."** are made to order and may require longer delivery times. Please contact customer service for availability.*

Section 1 Standard Spray Sprinklers
Section 2 Extended Coverage Sprinklers
Section 3 Storage Sprinklers
Section 4 Residential Products
Section 5 Dry Sprinklers
Section 6 Special Sprinklers
Section 7 Nozzles and Sprinkler Accessories

## LF II - Low Flow Horizontal Sidewall, K=4.4, 1/2" N.P.T.

SIN TY2334

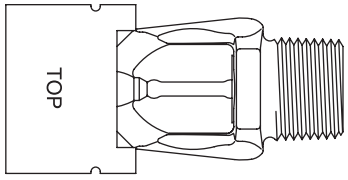


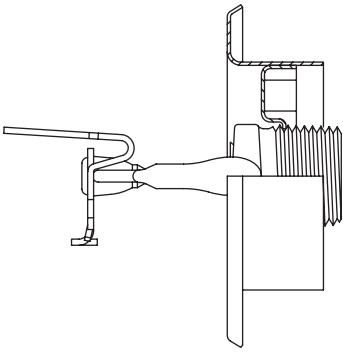

| C.O. | Number | Model | Finish | Temperature | List Price |
|---|---|---|---|---|---|
| | **51-215-1-155** | LFII Sidewall | Brass | 155°F (68°C) | $48.25 |
| ◗ | **51-215-1-175** | LFII Sidewall | Brass | 175°F (79°C) | $48.25 |
| | **51-215-9-155** | LFII Sidewall | Chrome | 155°F (68°C) | $48.25 |
| ◗ | **51-215-9-175** | LFII Sidewall | Chrome | 175°F (79°C) | $48.25 |
| | **51-215-4-155** | LFII Sidewall | Signal White (RAL 9003) | 155°F (68°C) | $48.25 |
| ◗ | **51-215-4-175** | LFII Sidewall | Signal White (RAL 9003) | 175°F (79°C) | $48.25 |
| | **Recessed Escutcheons (Order Separately)** | | | | |
| ◗ | **56-705-2-010** | 1/2" Bright Brass (Style 20) | | | $22.65 |
| | **56-705-9-010** | 1/2" Chrome Plated (Style 20) | | | $6.30 |
| | **56-705-4-010** | 1/2" Signal White (RAL 9003) (Style 20) | | | $6.30 |
| | **Sprinkler Wrench** | | | | |
| | **56-000-6-387** | W-Type 6 Wrench | | | $252.89 |
| | **56-850-4-001** | W-Type 7 Wrench (Recessed Only) | | | $427.09 |

**Technical Data Sheet: TFP412, Design Guide: TFP490**

*Items marked **"C.O."** are made to order and may require longer delivery times. Please contact customer service for availability.*

*See latest Technical Data Sheets for specific Approvals, Listings, Design Parameters & available finishes. Sprinkler heads & escutcheons are priced separately unless otherwise noted.*

## LF II - Low Flow Pendent, Modified, K=4.9 ,1/2" N.P.T. Wet Pipe Systems

100 Box Quantity (Pendent 20 lbs/box (SIN TY2236))
TY2236 replaces previous TY2234 residential product

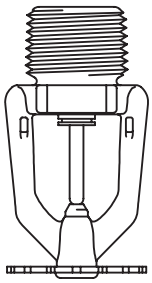

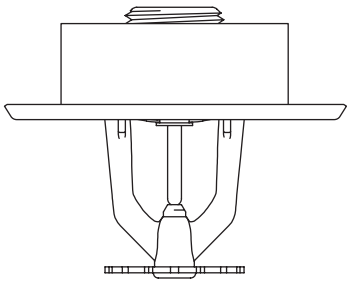

| C.O. | Number | Model | Finish | Temperature | List Price |
|---|---|---|---|---|---|
| | **51-212-1-155** | LFII Pendent | Brass | 155°F (68°C) | $38.60 |
| ◗ | **51-212-1-175** | LFII Pendent | Brass | 175°F (79°C) | $38.60 |
| | **51-212-9-155** | LFII Pendent | Chrome | 155°F (68°C) | $38.60 |
| ◗ | **51-212-9-175** | LFII Pendent | Chrome | 175°F (79°C) | $38.60 |
| | **51-212-4-155** | LFII Pendent | Signal White (RAL 9003) | 155°F (68°C) | $38.60 |
| ◗ | **51-212-4-175** | LFII Pendent | Signal White (RAL 9003) | 175°F (79°C) | $38.60 |
| | **51-212-5-155** | LFII Pendent | Jet Black (RAL 9005) | 155°F (68°C) | $103.36 |
| ◗ | **51-212-5-175** | LFII Pendent | Jet Black (RAL 9005) | 175°F (79°C) | $103.36 |
| | **Recessed Escutcheons (Order Separately)** | | | | |
| | **56-715-2-010** | 1/2" Brass Plated (Style 15) | | | $22.65 |
| | **56-715-9-010** | 1/2" Chrome Plated (Style 15) | | | $5.40 |
| | **56-715-4-010** | 1/2" Signal White (RAL 9003) (Style 15) | | | $5.40 |
| ◗ | **56-705-2-010** | 1/2" Bright Brass (Style 20) | | | $22.65 |
| | **56-705-9-010** | 1/2" Chrome Plated (Style 20) | | | $6.30 |
| | **56-705-4-010** | 1/2" Signal White (RAL 9003) (Style 20) | | | $6.30 |
| | **Sprinkler Wrench** | | | | |
| | **56-000-6-387** | W-Type 6 Wrench | | | $252.89 |
| | **56-850-4-001** | W-Type 7 Wrench (Recessed Only) | | | $427.09 |

**Technical Data Sheet: Pendent TFP403,**
**Design Guide: TFP490**

**See Technical Data Sheet TFP412 to reference details on the discontinued TY2234**



*See latest Technical Data Sheets for specific Approvals, Listings, Design Parameters & available finishes. Sprinkler heads & escutcheons are priced separately unless otherwise noted.*

*Items marked **"C.O."** are made to order and may require longer delivery times. Please contact customer service for availability.*

Section 1 Standard Spray Sprinklers
Section 2 Extended Coverage Sprinklers
Section 3 Storage Sprinklers
Section 4 Residential Products
Section 5 Dry Sprinklers
Section 6 Special Sprinklers
Section 7 Nozzles and Sprinkler Accessories

## LF II - Low Flow Pendent, K=5.8 (pendent), 1/2" N.P.T.

100 Box Quantity (SIN TY3934))

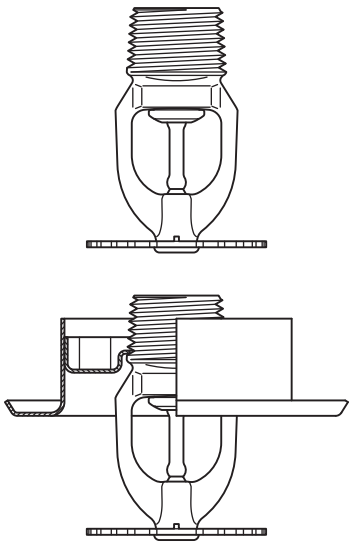

| C.O. | Number | Model | Finish | Temperature | List Price |
|---|---|---|---|---|---|
| | **51-058-1-155** | LFII Pendent | Brass | 155°F (68°C) | $77.59 |
| | **51-058-1-175** | LFII Pendent | Brass | 175°F (79°C) | $77.59 |
| | **51-058-9-155** | LFII Pendent | Chrome | 155°F (68°C) | $80.11 |
| | **51-058-9-175** | LFII Pendent | Chrome | 175°F (79°C) | $80.11 |
| | **51-058-4-155** | LFII Pendent | Signal White (RAL 9003) | 155°F (68°C) | $76.93 |
| | **51-058-4-175** | LFII Pendent | Signal White (RAL 9003) | 175°F (79°C) | $76.93 |
| | **51-058-5-155** | LFII Pendent | Jet Black (RAL 9005) | 155°F (68°C) | $93.12 |
| | **Recessed Escutcheons (Order Separately)** | | | | |
| ◗ | **56-705-2-010** | 1/2" Bright Brass (Style 20) | | | $22.65 |
| | **56-705-9-010** | 1/2" Chrome Plated (Style 20) | | | $6.30 |
| | **56-705-4-010** | 1/2" Signal White (RAL 9003) (Style 20) | | | $6.30 |
| | **56-705-6-010** | 1/2" Jet Black (RAL 9005) (Style 20) | | | $19.63 |
| | **Sprinkler Wrench** | | | | |
| | **56-000-6-387** | W-Type 6 Wrench | | | $252.89 |
| | **56-850-4-001** | W-Type 7 Wrench (Recessed Only) | | | $427.09 |
| | **Technical Data Sheet: Pendent TFP401, Design Guide: TFP490** | | | | |

## LFII - Residential Concealed Pendent Sprinkler, Domed Plate, K=4.9, 1/2" N.P.T.

40 Box Quantity, 15 lbs/box (SIN TY2234)

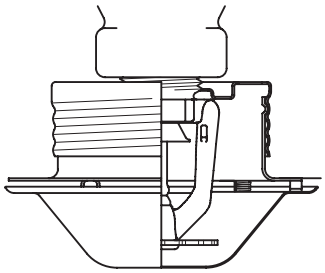

| C.O. | Number | Model | Finish | Temperature | List Price |
|---|---|---|---|---|---|
| | **51-873-1-155** | LFII Pendent Sprinkler | Brass | 155°F (68°C) | $68.61 |
| | **Cover Plates (Order Separately)** | | | | |
| | **56-873-9-135** | LFII Cover Plate | Chrome | 135°F (57°C) | $48.84 |
| | **56-873-4-135** | LFII Cover Plate | Signal White (RAL 9003) | 135°F (57°C) | $29.21 |
| ◗ | **56-873-X-135** | LFII Cover Plate | Special Order* | 135°F (57°C) | $52.74 |
| | **Sprinkler Wrench** | | | | |
| | **56-850-4-001** | W-Type 7 Wrench | | | $427.09 |
| | **Options** | | | | |
| ◗ | **6012** | *Special Order paint match subject to set-up charge. (Net Price) | | | $630.79 |
| | **Technical Data Sheet: TFP450**<br>**Design Guide: TFP490** | | | | |

**Note: All "Special Order" cover plates are special ordered and are Non-Returnable. Please see "Terms & Conditions"**

*Items marked **"C.O."** are made to order and may require longer delivery times. Please contact customer service for availability.*

*See latest Technical Data Sheets for specific Approvals, Listings, Design Parameters & available finishes. Sprinkler heads & escutcheons are priced separately unless otherwise noted.*

## LFII - Residential Flat-Plate Concealed Pendent Sprinkler, Wet Pipe System, K=4.9, 1/2" N.P.T.

40 Box Quantity, 20 lbs/box (SIN TY2534)

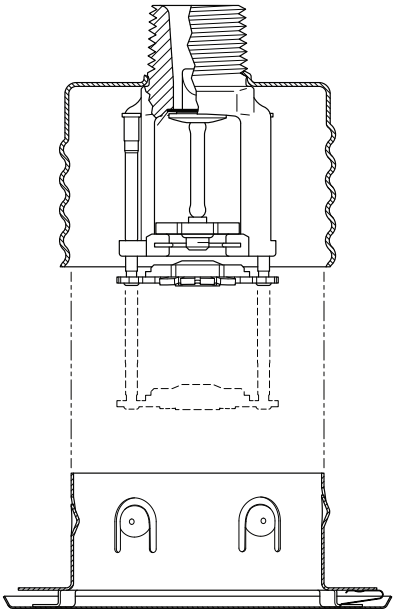

**Note: All "Special Order" cover plates are special ordered and are Non-Returnable. Please see "Terms & Conditions"**

| C.O. | Number | Finish | Temperature | List Price |
|---|---|---|---|---|
| | **51-549-1-155** | Brass | 155°F (68°C) | $53.43 |
| | **51-549-1-200** | Brass | 200°F (93°C) | $53.43 |
| | **Cover Plates (Order Separately) (For use with 155° F Sprinkler)** | | | |
| ◗ | **56-891-0-135** | Ivory (RAL1015) | 135°F (57°C) | $45.75 |
| | **56-891-1-135** | Brass | 135°F (57°C) | $45.76 |
| ◗ | **56-891-2-135** | Beige (RAL1001) | 135°F (57°C) | $45.76 |
| ◗ | **56-891-3-135** | Pure White (RAL9010) | 135°F (57°C) | $45.76 |
| | **56-891-4-135** | Signal White (RAL9003) | 135°F (57°C) | $13.75 |
| | **56-891-5-135** | Grey White (RAL9002) | 135°F (57°C) | $45.76 |
| ◗ | **56-891-6-135** | Terra Brown (RAL8028) | 135°F (57°C) | $45.76 |
| | **56-891-7-135** | Black (RAL9005) | 135°F (57°C) | $45.76 |
| | **56-891-8-135** | Brushed Brass | 135°F (57°C) | $101.86 |
| | **56-891-9-135** | Brushed Chrome | 135°F (57°C) | $73.72 |
| | **Cover Plates (Order Separately) (For use with 200° F Sprinkler)** | | | |
| ◗ | **56-891-0-165** | Ivory (RAL1015) | 165°F (74°C) | $45.75 |
| | **56-891-1-165** | Brass | 165°F (74°C) | $45.76 |
| ◗ | **56-891-2-165** | Beige (RAL1001) | 165°F (74°C) | $45.76 |
| ◗ | **56-891-3-165** | Pure White (RAL9010) | 165°F (74°C) | $45.76 |
| | **56-891-4-165** | Signal White (RAL9003) | 165°F (74°C) | $13.75 |
| | **56-891-5-165** | Grey White (RAL9002) | 165°F (74°C) | $45.76 |
| ◗ | **56-891-6-165** | Terra Brown (RAL8028) | 165°F (74°C) | $45.76 |
| | **56-891-7-165** | Black (RAL9005) | 165°F (74°C) | $45.76 |
| | **56-891-8-165** | Brushed Brass | 165°F (74°C) | $101.86 |
| | **56-891-9-165** | Brushed Chrome | 165°F (74°C) | $113.04 |
| | **Accessories** | | | |
| | **56-000-1-300** | Cover Plate Installation Tool | | $268.31 |
| | **91-201-1-015** | Protective Cap (Net Price) | | $0.87 |
| | **Sprinkler Wrench** | | | |
| | **56-000-1-077** | W-Type 44 Wrench | | $204.53 |
| | **Options** | | | |
| ◗ | **6012** | *Special Order paint match subject to set-up charge. (Net Price). | | $630.79 |

**Technical Data Sheet: TFP446**
**Design Guide: TFP490**



*See latest Technical Data Sheets for specific Approvals, Listings, Design Parameters & available finishes. Sprinkler heads & escutcheons are priced separately unless otherwise noted.*

*Items marked **"C.O."** are made to order and may require longer delivery times. Please contact customer service for availability.*

Section 1 Standard Spray Sprinklers
Section 2 Extended Coverage Sprinklers
Section 3 Storage Sprinklers
Section 4 Residential Products
Section 5 Dry Sprinklers
Section 6 Special Sprinklers
Section 7 Nozzles and Sprinkler Accessories

## LFII - Lead-Free Residential Flat-Plate Poly Concealed Pendent Sprinkler, Wet Pipe System, K=4.9, 1/2" N.P.T.

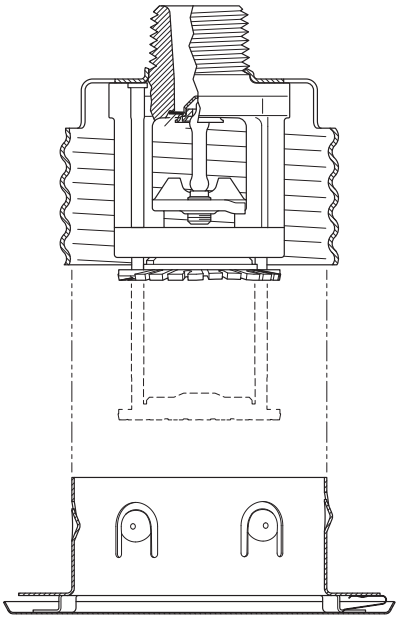

**Note: All "Special Order" cover plates are special ordered and are Non-Returnable. Please see "Terms & Conditions"**

40 Box Quantity, 14 lbs/box (SIN TY3534)

| C.O. | Number | Finish | Temperature | List Price |
|---|---|---|---|---|
| | **50-451-1-155** | Black | 155°F (68°C) | $46.18 |
| | **50-451-1-200** | Black | 200°F (93°C) | $46.19 |
| | **Cover Plates (Order Separately) (For use with 155° F Sprinkler)** | | | |
| ◗ | **56-891-0-135** | Ivory (RAL1015) | 135°F (57°C) | $45.75 |
| | **56-891-1-135** | Brass | 135°F (57°C) | $45.76 |
| ◗ | **56-891-2-135** | Beige (RAL1001) | 135°F (57°C) | $45.76 |
| ◗ | **56-891-3-135** | Pure White (RAL9010) | 135°F (57°C) | $45.76 |
| | **56-891-4-135** | Signal White (RAL9003) | 135°F (57°C) | $13.75 |
| | **56-891-5-135** | Grey White (RAL9002) | 135°F (57°C) | $45.76 |
| ◗ | **56-891-6-135** | Terra Brown (RAL8028) | 135°F (57°C) | $45.76 |
| | **56-891-7-135** | Black (RAL9005) | 135°F (57°C) | $45.76 |
| | **56-891-8-135** | Brushed Brass | 135°F (57°C) | $101.86 |
| | **56-891-9-135** | Brushed Chrome | 135°F (57°C) | $73.72 |
| | **Cover Plates (Order Separately) (For use with 200° F Sprinkler)** | | | |
| ◗ | **56-891-0-165** | Ivory (RAL1015) | 165°F (74°C) | $45.75 |
| | **56-891-1-165** | Brass | 165°F (74°C) | $45.76 |
| ◗ | **56-891-2-165** | Beige (RAL1001) | 165°F (74°C) | $45.76 |
| ◗ | **56-891-3-165** | Pure White (RAL9010) | 165°F (74°C) | $45.76 |
| | **56-891-4-165** | Signal White (RAL9003) | 165°F (74°C) | $13.75 |
| | **56-891-5-165** | Grey White (RAL9002) | 165°F (74°C) | $45.76 |
| ◗ | **56-891-6-165** | Terra Brown (RAL8028) | 165°F (74°C) | $45.76 |
| | **56-891-7-165** | Black (RAL9005) | 165°F (74°C) | $45.76 |
| | **56-891-8-165** | Brushed Brass | 165°F (74°C) | $101.86 |
| | **56-891-9-165** | Brushed Chrome | 165°F (74°C) | $113.04 |
| | **Accessories** | | | |
| | **56-000-1-300** | Cover Plate Installation Tool | | $268.31 |
| | **91-201-1-015** | Protective Cap (Net Price) | | $0.87 |
| | **Sprinkler Wrench** | | | |
| | **56-000-1-078** | W-Type 43 Wrench | | $180.14 |
| | **Options** | | | |
| ◗ | **6012** | *Special Order paint match subject to set-up charge. (Net Price). | | $630.79 |
| | **Technical Data Sheet: TFP447**<br>**Design Guide: TFP490** | | | |

*Items marked **"C.O."** are made to order and may require longer delivery times. Please contact customer service for availability.*

*See latest Technical Data Sheets for specific Approvals, Listings, Design Parameters & available finishes. Sprinkler heads & escutcheons are priced separately unless otherwise noted.*

## LFII - Residential Concealed Pendent Sprinkler, Flat Plate
## Wet Pipe System, K=5.8, 1/2" N.P.T.

40 Box Quantity, 20 lbs/box (SIN TY3584)

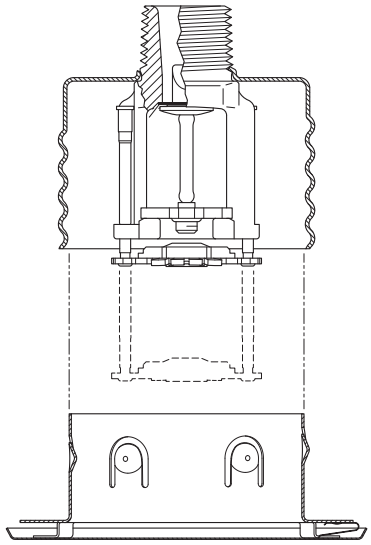

**Note: All "Special Order" cover plates are special ordered and are Non-Returnable. Please see "Terms & Conditions"**

| C.O. | Number | Finish | Temperature | List Price |
|---|---|---|---|---|
| | **51-558-1-155** | Brass | 155°F (68°C) | $64.47 |
| | **51-558-1-200** | Brass | 200°F (93°C) | $64.48 |
| | | **Cover Plates (Order Separately) (For use with 155° F Sprinkler)** | | |
| ◗ | **56-891-0-135** | Ivory (RAL1015) | 135°F (57°C) | $45.75 |
| ◗ | **56-891-2-135** | Beige (RAL1001) | 135°F (57°C) | $45.76 |
| ◗ | **56-891-3-135** | Pure White (RAL9010) | 135°F (57°C) | $45.76 |
| | **56-891-4-135** | Signal White (RAL9003) | 135°F (57°C) | $13.75 |
| | **56-891-5-135** | Grey White (RAL9002) | 135°F (57°C) | $45.76 |
| ◗ | **56-891-6-135** | Terra Brown (RAL8028) | 135°F (57°C) | $45.76 |
| | **56-891-7-135** | Black (RAL9005) | 135°F (57°C) | $45.76 |
| | **56-891-8-135** | Brushed Brass | 135°F (57°C) | $101.86 |
| | **56-891-9-135** | Brushed Chrome | 135°F (57°C) | $73.72 |
| | | **Cover Plates (Order Separately) (For use with 200° F Sprinkler)** | | |
| ◗ | **56-891-0-165** | Ivory (RAL1015) | 165°F (74°C) | $45.75 |
| ◗ | **56-891-2-165** | Beige (RAL1001) | 165°F (74°C) | $45.76 |
| ◗ | **56-891-3-165** | Pure White (RAL9010) | 165°F (74°C) | $45.76 |
| | **56-891-4-165** | Signal White (RAL9003) | 165°F (74°C) | $13.75 |
| | **56-891-5-165** | Grey White (RAL9002) | 165°F (74°C) | $45.76 |
| ◗ | **56-891-6-165** | Terra Brown (RAL8028) | 165°F (74°C) | $45.76 |
| | **56-891-7-165** | Black (RAL9005) | 165°F (74°C) | $45.76 |
| | **56-891-8-165** | Brushed Brass | 165°F (74°C) | $101.86 |
| | **56-891-9-165** | Brushed Chrome | 165°F (74°C) | $113.04 |
| | | **Accessories** | | |
| | **56-000-1-300** | Cover Plate Installation Tool | | $268.31 |
| | **91-201-1-015** | Protective Cap (Net Price) | | $0.87 |
| | | **Sprinkler Wrench** | | |
| | **56-000-1-077** | W-Type 44 Wrench | | $204.53 |
| | | **Options** | | |
| ◗ | **6012** | *Special Order paint match subject to set-up charge. (Net Price). | | $630.79 |

**Technical Data Sheet: TFP448**
**Design Guide: TFP490**



*See latest Technical Data Sheets for specific Approvals, Listings, Design Parameters & available finishes. Sprinkler heads & escutcheons are priced separately unless otherwise noted.*

*Items marked **"C.O."** are made to order and may require longer delivery times. Please contact customer service for availability.*

Section 1 Standard Spray Sprinklers
Section 2 Extended Coverage Sprinklers
Section 3 Storage Sprinklers
Section 4 Residential Products
Section 5 Dry Sprinklers
Section 6 Special Sprinklers
Section 7 Nozzles and Sprinkler Accessories

## LFII - Residential Polymeric Concealed Pendent Sprinkler, Flat Plate Wet Pipe System, K=3.0, 1/2" N.P.T.

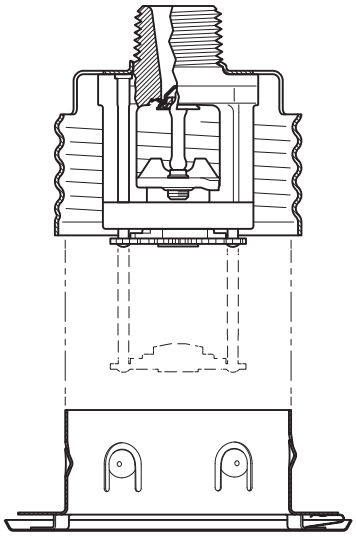

**Note: All "Special Order" cover plates are special ordered and are Non-Returnable. Please see "Terms & Conditions"**

40 Box Quantity, 20 lbs/box (SIN TY1534)

| C.O. | Number | Finish | Temperature | List Price |
|---|---|---|---|---|
| | **50-430-1-155** | Black | 155°F (68°C) | $80.09 |
| | **50-430-1-200** | Black | 200°F (93°C) | $130.34 |
| | **Cover Plates (Order Separately) (For use with 155° F Sprinkler)** | | | |
| ◗ | **56-891-0-135** | Ivory (RAL1015) | 135°F (57°C) | $45.75 |
| ◗ | **56-891-2-135** | Beige (RAL1001) | 135°F (57°C) | $45.76 |
| ◗ | **56-891-3-135** | Pure White (RAL9010) | 135°F (57°C) | $45.76 |
| | **56-891-4-135** | Signal White (RAL9003) | 135°F (57°C) | $13.75 |
| | **56-891-5-135** | Grey White (RAL9002) | 135°F (57°C) | $45.76 |
| ◗ | **56-891-6-135** | Brown (RAL8028) | 135°F (57°C) | $45.76 |
| | **56-891-7-135** | Black (RAL9005) | 135°F (57°C) | $45.76 |
| | **56-891-8-135** | Brushed Brass | 135°F (57°C) | $101.86 |
| | **56-891-9-135** | Brushed Chrome | 135°F (57°C) | $73.72 |
| | **Cover Plates (Order Separately) (For use with 200° F Sprinkler)** | | | |
| ◗ | **56-891-0-165** | Ivory (RAL1015) | 165°F (74°C) | $45.75 |
| ◗ | **56-891-2-165** | Beige (RAL1001) | 165°F (74°C) | $45.76 |
| ◗ | **56-891-3-165** | Pure White (RAL9010) | 165°F (74°C) | $45.76 |
| | **56-891-4-165** | Signal White (RAL9003) | 165°F (74°C) | $13.75 |
| | **56-891-5-165** | Grey White (RAL9002) | 165°F (74°C) | $45.76 |
| ◗ | **56-891-6-165** | Brown (RAL8028) | 165°F (74°C) | $45.76 |
| | **56-891-7-165** | Black (RAL9005) | 165°F (74°C) | $45.76 |
| | **56-891-8-165** | Brushed Brass | 165°F (74°C) | $101.86 |
| | **56-891-9-165** | Brushed Chrome | 165°F (74°C) | $113.04 |
| | **Accessories** | | | |
| | **56-000-1-300** | Cover Plate Installation Tool | | $268.31 |
| | **91-201-1-015** | Protective Cap (Net Price) | | $0.87 |
| | **Sprinkler Wrench** | | | |
| | **56-000-1-078** | W-Type 43 Wrench | | $180.14 |
| | **Options** | | | |
| ◗ | **6012** | *Special Order paint match subject to set-up charge. (Net Price). | | $630.79 |

**Technical Data Sheet: TFP439**
**Design Guide: TFP490**

*Items marked **"C.O."** are made to order and may require longer delivery times. Please contact customer service for availability.*

*See latest Technical Data Sheets for specific Approvals, Listings, Design Parameters & available finishes. Sprinkler heads & escutcheons are priced separately unless otherwise noted.*

## LFII - Residential Concealed Horizontal Sidewall Sprinklers, K=4.2, 1/2" N.P.T.

40 Box Quantity, 15 lbs/box (SIN TY2324)

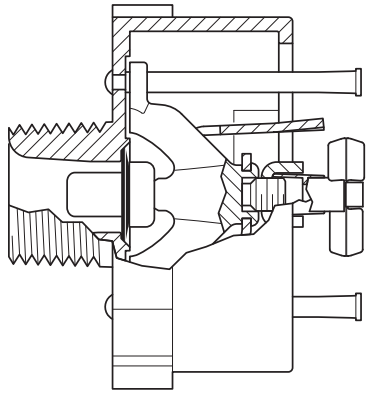

**Note: All "Special Order" cover plates are special ordered and are Non-Returnable. Please see "Terms & Conditions"**

| C.O. | Number | Finish | Temperature | List Price |
|---|---|---|---|---|
| | **50-520-1-160** | Brass | 160°F (71°C) | $230.01 |
| | **Cover Plates (Order Separately) (For use with 160° F Sprinkler)** | | | |
| ◗ | **56-204-0-135** | Ivory (RAL1015) | 135°F (57°C) | $44.84 |
| ◗ | **56-204-2-135** | Beige (RAL1001) | 135°F (57°C) | $44.84 |
| ◗ | **56-204-3-135** | Pure White (RAL9010) | 135°F (57°C) | $44.84 |
| | **56-204-4-135** | Signal White (RAL9003) | 135°F (57°C) | $16.82 |
| | **56-204-5-135** | Grey White (RAL9002) | 135°F (57°C) | $44.84 |
| ◗ | **56-204-6-135** | Terra Brown (RAL8028) | 135°F (57°C) | $44.84 |
| | **56-204-7-135** | Black (RAL9005) | 135°F (57°C) | $44.84 |
| | **56-204-8-135** | Brushed Brass | 135°F (57°C) | $101.86 |
| | **56-204-9-135** | Brushed Chrome | 135°F (57°C) | $73.72 |
| ◗ | **56-204-X-135** | Special Order* | 135°F (57°C) | $44.84 |
| | **Accessories** | | | |
| | **56-000-1-300** | Cover Plate Installation Tool | | $268.31 |
| | **91-201-1-015** | Protective Cap (Net Price) | | $0.87 |
| | **Sprinkler Wrench** | | | |
| | **56-320-1-015** | W-Type 37 Wrench | | $444.94 |
| | **Options** | | | |
| ◗ | **6012** | *Special Order paint match subject to set-up charge. (Net Price). | | $630.79 |

**Pipe Guide Bracket**

| C.O. | Number | Description | NET Price |
|---|---|---|---|
| | **91-520-115** | 3/4" Pipe Guide Bracket accessory for sprinkler installation adjacent to framing member, 2" x 4" | $1.52 |
| | **91-520-1-117** | 1" Pipe Guide Bracket accessory for sprinkler installation adjacent to framing member, 2" x 4" | $1.62 |

**Technical Data Sheet: TFP445**
**Design Guide: TFP490**



*See latest Technical Data Sheets for specific Approvals, Listings, Design Parameters & available finishes. Sprinkler heads & escutcheons are priced separately unless otherwise noted.*

*Items marked **"C.O."** are made to order and may require longer delivery times. Please contact customer service for availability.*

Section 1 Standard Spray Sprinklers
Section 2 Extended Coverage Sprinklers
Section 3 Storage Sprinklers
Section 4 Residential Products
Section 5 Dry Sprinklers
Section 6 Special Sprinklers
Section 7 Nozzles and Sprinkler Accessories

## Model LFII, K=5.8 & K=5.6, Residential, NFPA 13 Optimized Horizontal Sidewall Sprinklers

(K=5.8 SIN TY4334)(K=5.6 SIN TY3334)

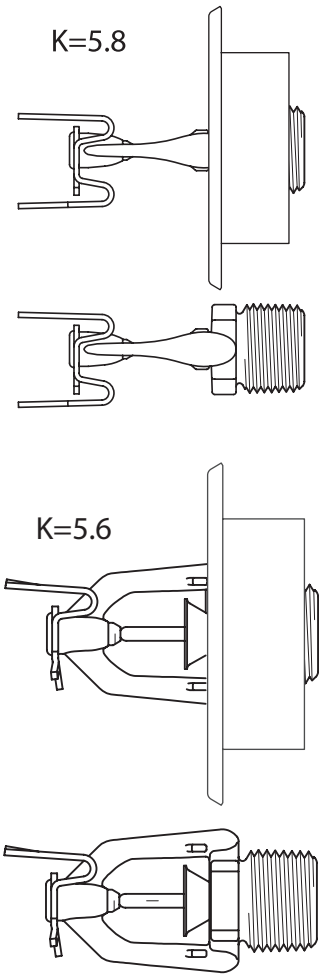


| C.O. | Part Numbers | K Factor | Finish | Temperature | List Price |
|---|---|---|---|---|---|
| | **51-534-1-155** | K=5.8 | Brass | 155°F (68°C) | $100.51 |
| | **51-534-1-175** | K=5.8 | Brass | 175°F (79°C | $100.51 |
| | **51-534-9-155** | K=5.8 | Chrome | 155°F (68°C) | $100.50 |
| | **51-534-9-175** | K=5.8 | Chrome | 175°F (79°C | $100.50 |
| | **51-534-4-155** | K=5.8 | Signal White (RAL 9003) | 155°F (68°C) | $100.50 |
| | **51-534-4-175** | K=5.8 | Signal White (RAL 9003) | 175°F (79°C | $100.50 |
| | **51-524-1-155** | K=5.6 | Brass | 155°F (68°C) | $100.50 |
| | **51-524-1-175** | K=5.6 | Brass | 175°F (79°C | $100.50 |
| | **51-524-9-155** | K=5.6 | Chrome | 155°F (68°C) | $100.50 |
| | **51-524-9-175** | K=5.6 | Chrome | 175°F (79°C | $100.50 |
| | **51-524-4-155** | K=5.6 | Signal White (RAL 9003) | 155°F (68°C) | $100.50 |
| | **51-524-4-175** | K=5.6 | Signal White (RAL 9003) | 175°F (79°C | $100.50 |
| | **Recessed Escutcheons (Order Separately)** | | | | |
| | **56-705-2-010** | 1/2" Brass Plated (Style 20) | | | $22.65 |
| | **56-705-9-010** | 1/2" Chrome Plated (Style 20) | | | $6.30 |
| | **56-705-4-010** | 1/2" Signal White (RAL 9003) (Style 20) | | | $6.30 |
| | **Sprinkler Wrench** | | | | |
| | **56-000-6-387** | W-Type 6 Sprinkler Wrench | | | $252.89 |
| | **56-850-4-001** | W-Type 7 Sprinkler Wrench | | | $427.09 |

**Technical Data Sheet: K=5.8 - TFP417, K=5.6 - TFP415**
**Design Guide: TFP490**

*Items marked **"C.O."** are made to order and may require longer delivery times. Please contact customer service for availability.*

*See latest Technical Data Sheets for specific Approvals, Listings, Design Parameters & available finishes. Sprinkler heads & escutcheons are priced separately unless otherwise noted.*

## LFII - Residential NFPA 13 Optimized Pendent, Recessed and Concealed Sprinklers, K=6.9, 3/4" N.P.T.

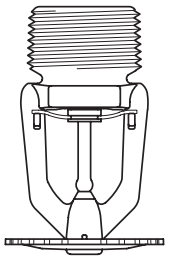

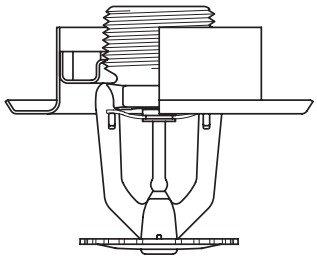

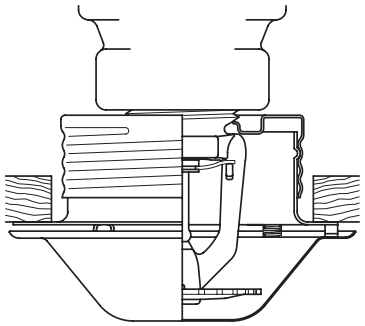

**Note: All "Special Order" cover plates are special ordered and are Non-Returnable. Please see "Terms & Conditions"**

100 Box Quantity (SIN TY4234)

| C.O. | Number | Model | Finish | Temperature | List Price |
|---|---|---|---|---|---|
| | **51-069-1-155** | LFII Pendent Sprinkler | Brass | 155°F (68°C) | $124.05 |
| | **51-069-1-175** | LFII Pendent Sprinkler | Brass | 175°F (79°C) | $124.05 |
| | **51-069-9-155** | LFII Pendent Sprinkler | Chrome | 155°F (68°C) | $124.01 |
| | **51-069-9-175** | LFII Pendent Sprinkler | Chrome | 175°F (79°C) | $124.01 |
| | **51-069-4-155** | LFII Pendent Sprinkler | Signal White (RAL 9003) | 155°F (68°C) | $124.01 |
| | **51-069-4-175** | LFII Pendent Sprinkler | Signal White (RAL 9003) | 175°F (79°C) | $124.01 |
| | **51-068-1-155** | LFII Concealed Pendent Sprinkler | | 155°F (68°C) | $102.59 |
| | **51-068-1-175** | LFII Concealed Pendent Sprinkler | | 175°F (79°C) | $102.59 |
| | **Cover Plates (Order Separately)** | | | | |
| | **56-873-9-135** | LFII Cover Plate | Chrome | 135°F (57°C) | $48.84 |
| | **56-873-4-135** | LFII Cover Plate | Signal White (RAL 9003) | 135°F (57°C) | $29.21 |
| ◗ | **56-873-X-135** | LFII Cover Plate | Special Order* | 135°F (57°C) | $52.74 |
| | **Recessed Escutcheons (Order Separately)** | | | | |
| | **56-705-2-011** | 3/4" Bright Brass (Style 30) | | | $22.65 |
| | **56-705-9-011** | 3/4" Chrome Plated (Style 30) | | | $9.20 |
| | **56-705-4-011** | 3/4" Signal White (RAL 9003) Recessed (Style 30) | | | $9.20 |
| | **Sprinkler Wrench** | | | | |
| | **56-000-6-387** | W-Type 6 Wrench | | | $252.89 |
| | **56-850-4-001** | W-Type 7 Wrench (Recessed & Concealed Only) | | | $427.09 |
| | **Options** | | | | |
| ◗ | **6012** | *Special Order paint match subject to set-up charge. (Net Price) | | | $630.79 |

**Technical Data Sheet: TFP408**



*See latest Technical Data Sheets for specific Approvals, Listings, Design Parameters & available finishes. Sprinkler heads & escutcheons are priced separately unless otherwise noted.*

*Items marked **"C.O."** are made to order and may require longer delivery times. Please contact customer service for availability.*

Section 1 Standard Spray Sprinklers
Section 2 Extended Coverage Sprinklers
Section 3 Storage Sprinklers
Section 4 Residential Products
Section 5 Dry Sprinklers
Section 6 Special Sprinklers
Section 7 Nozzles and Sprinkler Accessories

## Series LFII, Dry-Type, Residential Recessed Pendent, K=4.9, and Horizontal Sidewall and Recessed Horizontal Sidewall, K=4.4

P/N 63 – XXX – X – XXX

| | | MODEL/SIN |
|---|---|---|
| 10 | Pendent w/ Recessed Escutcheon | TY2235 |
| 12 | Horizontal Sidewall with Recessed Escutcheon | TY2335 |
| 13 | Horizontal Sidewall without Escutcheon | TY2335 |

| | TEMP. RATING |
|---|---|
| 1 | 155°F (68°C) |
| 2 | 175°F (79°C) |

| | SPRINKLER FINISH | RECESSED ESCUTCHEON FINISH |
|---|---|---|
| 9 | Chrome Plated | Chrome |
| 4 | White Polyester Coated | White |
| 2 | Natural Brass | Brass Plated |

| | ORDER LENGTH (EXAMPLES) |
|---|---|
| 055 | 5.50" |
| 082 | 8.25" |
| 180 | 18.00" |
| 187 | 18.75" |
| 240 | 24.00" |

63-10X-X-XXX
w/Std. Escutcheon

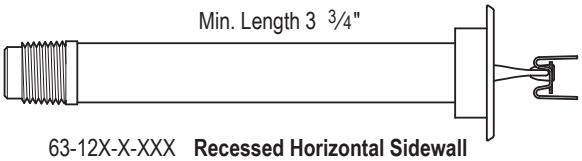


63-12X-X-XXX **Recessed Horizontal Sidewall**
w/Std. Escutcheon (1" NPT)

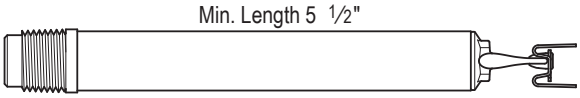


63-13X-X-XXX **Horizontal Sidewall**
(1" NPT)

**Note: All Dry Sprinklers are special ordered and are Non-Returnable. Please see "Terms & Conditions".**

| ***Length*** *(24" Max)* | | ***Pendent & HSW*** |
|---|---|---|
| 3-3/4" to 6" | | $406.76 |
| 6-1/4" to 8" | | $436.43 |
| 8-1/4" to 12" | | $441.77 |
| 12-1/4" to 15" | | $474.53 |
| 15-1/4" to 18" | | $510.44 |
| 18-1/4" to 21" | | $532.11 |
| 21-1/4" to 24" | | $562.25 |
| **Replacement Escutcheons** | | |
| **56-705-2-010** | 1/2" Brass Plated (Style 20) | $22.65 |
| **56-705-9-010** | 1/2" Chrome Plated (Style 20) | $6.30 |
| **56-705-4-010** | 1/2" Signal White (RAL 9003) (Style 20) | $6.30 |
| **Sprinkler Wrench** (Standard Pipe Wrench for Pipe Barrel) | | |
| **56-000-6-387** | W-Type 6 Wrench | $252.89 |
| **56-850-4-001** | W-Type 7 Wrench (Recessed) | $427.09 |

**Technical Data Sheets:**
**Pendent – TFP460,**
**HSW – TFP461**

*Items marked **"C.O."** are made to order and may require longer delivery times. Please contact customer service for availability.*

*See latest Technical Data Sheets for specific Approvals, Listings, Design Parameters & available finishes. Sprinkler heads & escutcheons are priced separately unless otherwise noted.*

## Attic Sprinklers K=4.2, K=5.6 & K=8.0, 1/2" and 3/4" N.P.T.

100 Box Quantity (BB/SD 31 lbs/box, HIP 22 lbs/box)

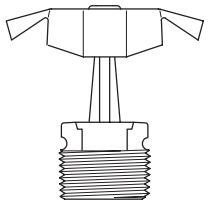

Back to Back (BB)

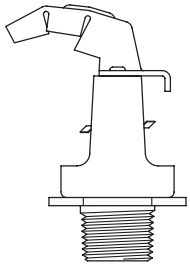

Single Directional (SD)

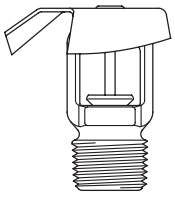

HIP

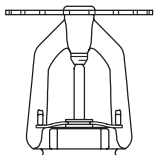

| C.O. | Part No. | Model | SIN Number | Pitch Rise over Run | Finish | K-Factor | Temperature | List Price |
|---|---|---|---|---|---|---|---|---|
| | **51-623-1-200** | ATTIC BB1, 17/32 | TY4180 | 4/12 to < 7/12 | Brass | 8.0 | 200°F (93°C) | $996.96 |
| | **51-621-1-200** | ATTIC BB2, 17/32 | TY4181 | 7/12 to < 10/12 | Brass | 8.0 | 200°F (93°C) | $996.96 |
| | **51-622-1-200** | ATTIC BB3, 17/32 | TY4182 | 10/12 to 12/12 | Brass | 8.0 | 200°F (93°C) | $996.96 |
| | **50-601-1-212** | ATTIC BB1, 1/2 | TY3180 | 4/12 to < 7/12 | Brass | 5.6 | 212°F (100°C) | $813.02 |
| | **50-602-1-212** | ATTIC BB2, 1/2 | TY3181 | 7/12 to < 10/12 | Brass | 5.6 | 212°F (100°C) | $813.02 |
| | **50-603-1-212** | ATTIC BB3, 1/2 | TY3182 | 10/12 to 12/12 | Brass | 5.6 | 212°F (100°C) | $813.02 |
| | **50-620-1-200** | ATTIC BB1, 1/2 | TY2180 | 4/12 to < 7/12 | Brass | 4.2 | 200°F (93°C) | $312.19 |
| | **50-621-1-200** | ATTIC BB2, 1/2 | TY2181 | 7/12 to < 10/12 | Brass | 4.2 | 200°F (93°C) | $312.19 |
| | **50-622-1-200** | ATTIC BB3, 1/2 | TY2182 | 10/12 to 12/12 | Brass | 4.2 | 200°F (93°C) | $312.19 |
| | **50-611-1-212** | ATTIC SD1, 1/2 | TY3183 | 4/12 to < 7/12 | Brass | 5.6 | 212°F (100°C) | $813.02 |
| | **50-612-1-212** | ATTIC SD2, 1/2 | TY3184 | 7/12 to < 10/12 | Brass | 5.6 | 212°F (100°C) | $813.02 |
| | **50-613-1-212** | ATTIC SD3, 1/2 | TY3185 | 10/12 to 12/12 | Brass | 5.6 | 212°F (100°C) | $813.02 |
| | **51-620-1-200** | ATTIC HIP | TY3187 | 4/12 to 12/12 | Brass | 5.6 | 200°F (93°C) | $813.02 |
| | **50-625-1-200** | AP, 1/2, K=5.6 | TY3190 | 3/12 to 12/12 | Brass | 5.6 | 200°F (93°C) | $128.41 |
| | **50-624-1-200** | AP, 1/2, K=4.2 | TY2190 | 3/12 to 12/12 | Brass | 4.2 | 200°F (93°C) | $128.41 |
| | **Sprinkler Wrench** | | | | | | | |
| | **56-895-1-001** | W-Type 3 Wrench | | | | | | $349.96 |
| | **56-000-6-387** | W-Type 6 Wrench | | | | | | $252.89 |
| | **56-000-1-106** | W-Type 20 Combination Wrench | | | | | | $427.62 |

PEAK™ PERFORMANCE

ATTIC PROTECTION SPRINKLER SYSTEM

**Technical Data Sheet: TFP610**



*See latest Technical Data Sheets for specific Approvals, Listings, Design Parameters & available finishes. Sprinkler heads & escutcheons are priced separately unless otherwise noted.*

*Items marked **"C.O."** are made to order and may require longer delivery times. Please contact customer service for availability.*

Section 1 Standard Spray Sprinklers
Section 2 Extended Coverage Sprinklers
Section 3 Storage Sprinklers
Section 4 Residential Products
Section 5 Dry Sprinklers
Section 6 Special Sprinklers
Section 7 Nozzles and Sprinkler Accessories

## Residential Shutoff Valves

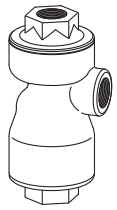

1" RSV-1

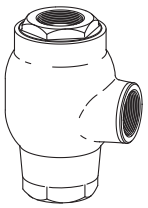

2" RSV-1

| Description | Part No. | List Price |
|---|---|---|
| 1" Model RSV-1 - Stainless Steel | **52-540-1-011** | $3,373.78 |
| 2" Model RSV-1 - Stainless Steel | **52-540-1-012** | $5,594.53 |

**Technical Data Sheet: TFP980 - Brass - TFP982 - Stainless Steel**

## Residential Components

### Pipe Guide Bracket

| Part No. | Description | NET Price |
|---|---|---|
| **91-520-1-115** | ¾" Pipe Guide Bracket accessory for sprinkler installation adjacent to framing member, 2" x 4" | $1.50 |
| **91-520-1-117** | 1" Pipe Guide Bracket accessory for sprinkler installation adjacent to framing member, 2" x 4" | $1.62 |

*Items marked **"C.O."** are made to order and may require longer delivery times. Please contact customer service for availability.*

*See latest Technical Data Sheets for specific Approvals, Listings, Design Parameters & available finishes. Sprinkler heads & escutcheons are priced separately unless otherwise noted.*

## Series DS-1, Dry, Standard Coverage, Pendent, Upright & Horizontal Sidewall, SR, K=5.6, 5mm Bulb

P/N 60 – XXX – X – XXX

| | |
|---|---|
| 96 | **Pendent** w/Std. Escutcheon (1" NPT) |
| 93 | **Pendent** w/Deep Escutcheon (1" NPT) |
| 97 | **Pendent** w/Std. Recessed Escutcheon (1" NPT) |
| 92 | **Pendent** w/o Escutcheon (1" NPT) |
| 94 | **Sidewall** w/Std. Escutcheon (1" NPT) |
| 53 | **Sidewall** w/Deep Escutcheon (1" NPT) |
| 54 | **Sidewall** w/o Escutcheon (1" NPT) |
| 98 | **Upright** w/o Escutcheon (1" NPT) |

| | C.O. | Temperatur e |
|---|---|---|
| 1 | | 155°F (68°C) |
| 2 | ◗ | 175°F (79°C) |
| 3 | | 200°F (93°C) |
| 4 | | 286°F (141°C) |
| 5 | ◗ | 360°F (182°C) |

| | Finish | |
|---|---|---|
| | Sprinkler | Escutcheon |
| 0 | Chrome | White* |
| 1 | Brass | White* |
| 2 | Brass | Brass |
| 4 | White* | White* |
| 8 | Chrome | Stainless Steel |
| 9 | Chrome | Chrome |

* Signal White (RAL 9003)

| | Length (for example) |
|---|---|
| 060 | 6.00" |
| 062 | 6.25" |
| 065 | 6.50" |
| 067 | 6.75" |
| 372 | 37.25" |
| 480 | 48.00" |

### DS-1 Standard Coverage - Standard Response

*SIN (Upright TY3155), (Pendent TY3255), (HSW TY3355)*

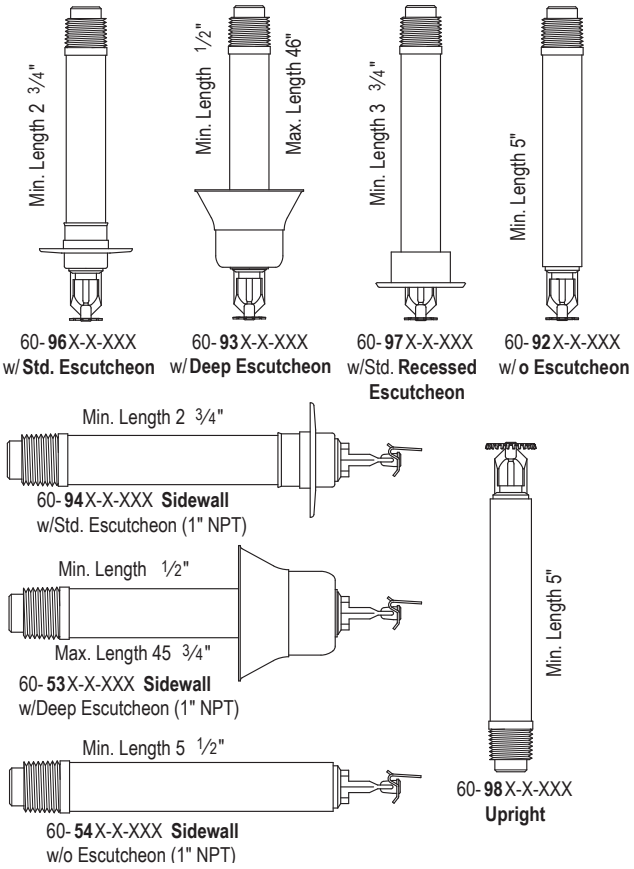


**Note: All sprinklers are special ordered and are Non-Returnable. Please see "Terms & Conditions"**

| *Length (48" Max)* | *60-98X-X-XXX* ***Upright*** | *60-96X-X-XXX 60-93X-X-XXX 60-97X-X-XXX 60-92X-X-XXX* ***Pendent*** | *60-53X-X-XXX 60-94X-X-XXX 60-54X-X-XXX* ***Sidewall*** |
|---|---|---|---|
| *1/2" to 5-3/4"* | $344.69 | $344.69 | $365.48 |
| *6"* | $330.10 | $330.10 | $346.52 |
| *6-1/4" to 7-3/4"* | $366.44 | $366.44 | $388.58 |
| *8"* | $352.23 | $352.23 | $367.74 |
| *8-1/4" to 11-3/4"* | $389.05 | $389.05 | $411.33 |
| *12"* | $367.52 | $367.52 | $385.77 |
| *12-1/4" to 15"* | $428.97 | $428.97 | $455.01 |
| *15-1/4" to 18"* | $454.07 | $454.07 | $473.85 |
| *18-1/4" to 21"* | $475.46 | $475.46 | $492.12 |
| *21 1/4" to 24"* | $481.44 | $481.44 | $511.15 |
| *24"-1/4" to 27"* | $525.27 | $525.27 | $540.68 |
| *27-1/4" to 30"* | $541.15 | $541.15 | $563.39 |
| *30-1/4" to 33"* | $548.61 | $548.61 | $587.36 |
| *33-1/4" to 36"* | $591.88 | $591.88 | $610.11 |
| *36-1/4" to 39"* | $607.60 | $607.60 | $630.70 |
| *39-1/4" to 42"* | $632.22 | $632.22 | $651.29 |
| *42-1/4" to 45"* | $637.49 | $637.49 | $672.77 |
| *45-1/4" to 48"* | $665.45 | $665.45 | $694.26 |

| **Replacement Escutcheons** | | |
|---|---|---|
| **56-701-2-010** | 1/2" Brass Plated (Style 10) | $22.65 |
| **56-701-9-010** | 1/2" Chrome Plated (Style 10) | $7.26 |
| **56-701-4-010** | 1/2" Signal White (RAL 9003) (Style 10) | $7.26 |
| **91-106-2-007** | Brass Plated (Push On) | $15.11 |
| **91-106-9-007** | Chrome Plated (Push On) | $14.79 |
| **91-106-0-007** | White Color (Push On) | $14.79 |
| **91-107-2-010** | Brass - Deep | $16.37 |
| **91-107-9-007** | Chrome - Deep | $14.00 |
| **91-107-4-007** | White - Deep | $14.00 |
| **Dry Sprinkler Rubber Boot Kit** | | |
| **63-000-0-002** | DSB-2 Dry Sprinkler Boot Kit | $188.84 |
| **Sprinkler Wrench** (Standard Pipe Wrench for pipe barrel) | | |
| **56-850-4-001** | W-Type 7 Wrench (Recessed Only) | $427.09 |
| **Technical Data Sheet: TFP500, Sprinkler Boot-TFP591** | | |



*See latest Technical Data Sheets for specific Approvals, Listings, Design Parameters & available finishes. Sprinkler heads & escutcheons are priced separately unless otherwise noted.*

*Items marked **"C.O."** are made to order and may require longer delivery times. Please contact customer service for availability.*

Section 1 Standard Spray Sprinklers
Section 2 Extended Coverage Sprinklers
Section 3 Storage Sprinklers
Section 4 Residential Products
Section 5 Dry Sprinklers
Section 6 Special Sprinklers
Section 7 Nozzles and Sprinkler Accessories

## Series DS-1, Dry, Standard Coverage, ¾" NPT
## Pendent & Horizontal Sidewall, QR, K=5.6, 3mm Bulb

P/N 60 – XXX – X – XXX

| | |
|---|---|
| 01 | **Pendent** w/Std. Escutcheon (3/4" NPT) |
| 02 | **Pendent** w/Deep Escutcheon (3/4" NPT) |
| 03 | **Pendent** w/Std. Recessed Escutcheon (3/4" NPT) |
| 04 | **Pendent** w/o Escutcheon (3/4" NPT) |
| 05 | **Sidewall** w/Std. Escutcheon (3/4" NPT) |
| 06 | **Sidewall** w/Deep Escutcheon (3/4" NPT) |
| 07 | **Sidewall** w/o Escutcheon (3/4" NPT) |

| | C.O. | Temperature |
|---|---|---|
| 1 | | 155°F (68°C) |
| 2 | ◗ | 175°F (79°C) |
| 3 | | 200°F (93°C) |
| 4 | | 286°F (141°C) |

| | Finish: Sprinkler | Finish: Escutcheon |
|---|---|---|
| 0 | Chrome | White* |
| 1 | Brass | White* |
| 2 | Brass | Brass |
| 4 | White* | White* |
| 8 | Chrome | Stainless Steel |
| 9 | Chrome | Chrome |

* Signal White (RAL 9003)

| | Length (for example) |
|---|---|
| 060 | 6.00" |
| 062 | 6.25" |
| 065 | 6.50" |
| 067 | 6.75" |
| 372 | 37.25" |
| 480 | 48.00" |

*¾" NPT SIN (Pendent TY3935), (HSW TY3735)*

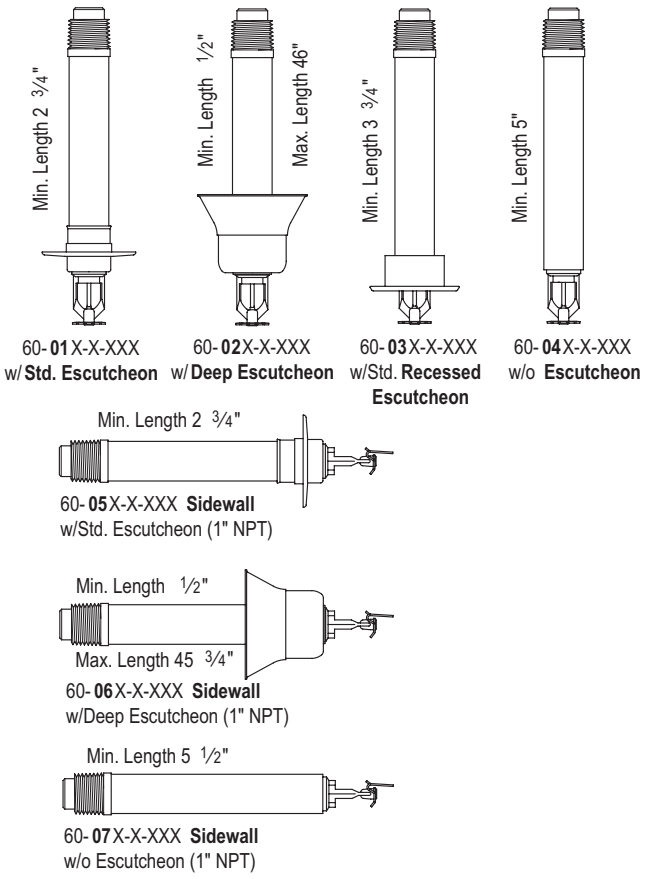


**Note: All Dry Sprinklers are special ordered and are Non-Returnable. Please see "Terms & Conditions"**

| *Length (48" Max)* | *Pendent* | *Sidewall* |
|---|---|---|
| *½" to 5-¾"* | $349.04 | $376.23 |
| *6"* | $398.44 | $443.69 |
| *6-¼" to 7-¾"* | $470.02 | $451.37 |
| *8"* | $441.93 | $460.88 |
| *8-¼" to 11-¾"* | $506.68 | $470.40 |
| *12"* | $459.57 | $470.40 |
| *12-¼" to 15"* | $527.09 | $474.18 |
| *15-¼" to 18"* | $527.24 | $572.53 |
| *18-¼" to 21"* | $583.07 | $612.55 |
| *21-¼" to 24"* | $603.80 | $640.81 |
| *24-¼" to 27"* | $620.04 | $659.28 |
| *27-¼" to 30"* | $650.08 | $677.75 |
| *30-¼" to 33"* | $680.13 | $696.22 |
| *33-¼" to 36"* | $707.17 | $734.82 |
| *36-¼" to 39"* | $734.21 | $773.43 |
| *39-¼" to 42"* | $761.84 | $812.03 |
| *42-¼" to 45"* | $789.46 | $823.20 |
| *45-¼" to 48"* | $817.08 | $834.34 |

| **Replacement Escutcheons** | | |
|---|---|---|
| **56-701-2-010** | ½" Brass Plated (Style 10) | $22.65 |
| **56-701-9-010** | ½" Chrome Plated (Style 10) | $7.26 |
| **56-701-4-010** | ½" Signal White (RAL 9003) (Style 10) | $7.26 |
| **91-106-2-007** | Brass Plated (Push On) | $15.11 |
| **91-106-9-007** | Chrome Plated (Push On) | $14.79 |
| **91-106-0-007** | White Color (Push On) | $14.79 |
| **91-107-2-010** | Brass - Deep | $16.37 |
| **91-107-9-007** | Chrome - Deep | $14.00 |
| **91-107-4-007** | White - Deep | $14.00 |
| **Dry Sprinkler Rubber Boot Kit** | | |
| **63-000-0-002** | DSB-2 Dry Sprinkler Boot Kit | $188.84 |
| **Sprinkler Wrench** (Standard Pipe Wrench for pipe barrel) | | |
| **56-850-4-001** | W-Type 7 Wrench (Recessed Only) | $427.09 |

**Technical Data Sheet: TFP510, Sprinkler Boot-TFP591**

*Items marked **"C.O."** are made to order and may require longer delivery times. Please contact customer service for availability.*

*See latest Technical Data Sheets for specific Approvals, Listings, Design Parameters & available finishes. Sprinkler heads & escutcheons are priced separately unless otherwise noted.*

## Series DS-1, Dry, Standard Coverage, 1" NPT
## Pendent, Upright & Horizontal Sidewall, QR, K=5.6, 3mm Bulb

P/N 60 – XXX – X – XXX

| | |
|---|---|
| 36 | **Pendent** w/Std. Escutcheon (1" NPT) |
| 33 | **Pendent** w/Deep Escutcheon (1" NPT) |
| 37 | **Pendent** w/Std. Recessed Escutcheon (1" NPT) |
| 32 | **Pendent** w/o Escutcheon (1" NPT) |
| 34 | **Sidewall** w/Std. Escutcheon (1" NPT) |
| 43 | **Sidewall** w/Deep Escutcheon (1" NPT) |
| 44 | **Sidewall** w/o Escutcheon (1" NPT) |
| 38 | **Upright** w/o Escutcheon (1" NPT) |

| | C.O. | Temperature |
|---|---|---|
| 1 | | 155°F (68°C) |
| 2 | ◗ | 175°F (79°C) |
| 3 | | 200°F (93°C) |
| 4 | | 286°F (141°C) |

| | Finish: Sprinkler | Finish: Escutcheon |
|---|---|---|
| 0 | Chrome | White* |
| 1 | Brass | White* |
| 2 | Brass | Brass |
| 4 | White* | White* |
| 8 | Chrome | Stainless Steel |
| 9 | Chrome | Chrome |

* Signal White (RAL 9003)

| | Length (for example) |
|---|---|
| 060 | 6.00" |
| 062 | 6.25" |
| 065 | 6.50" |
| 067 | 6.75" |
| 372 | 37.25" |
| 480 | 48.00" |

*1" NPT SIN (Upright TY3135), (Pendent TY3235), (HSW TY3335)*

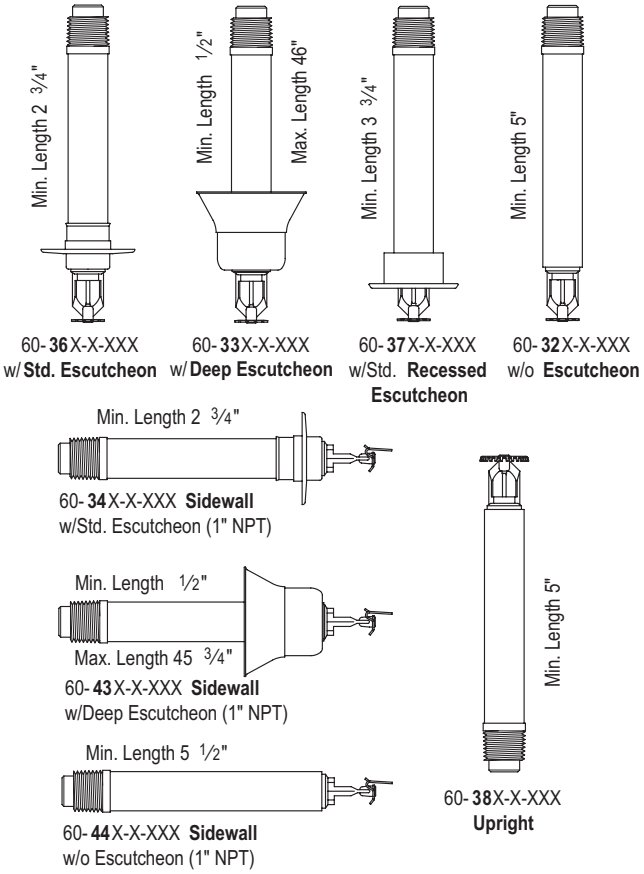


**Note: All Dry Sprinklers are special ordered and are Non-Returnable. Please see "Terms & Conditions"**

| *Length (48" Max)* | *Upright* | *Pendent* | *Sidewall* |
|---|---|---|---|
| *1/2" to 5-3/4"* | $218.47 | $218.47 | $292.14 |
| *6"* | $284.41 | $284.41 | $317.77 |
| *6-1/4" to 7-3/4"* | $399.89 | $399.89 | $405.32 |
| *8"* | $368.02 | $368.02 | $375.32 |
| *8-1/4" to 11-3/4"* | $424.93 | $424.93 | $441.59 |
| *12"* | $371.69 | $371.69 | $375.76 |
| *12-1/4" to 15"* | $438.53 | $438.53 | $475.30 |
| *15-1/4" to 18"* | $439.76 | $439.76 | $494.14 |
| *18-1/4" to 21"* | $480.93 | $480.93 | $512.97 |
| *21-1/4" to 24"* | $516.82 | $516.82 | $553.99 |
| *24-1/4" to 27"* | $541.76 | $541.76 | $561.44 |
| *27-1/4" to 30"* | $560.58 | $560.58 | $590.20 |
| *30-1/4" to 33"* | $587.24 | $587.24 | $615.42 |
| *33-1/4" to 36"* | $608.72 | $608.72 | $639.59 |
| *36-1/4" to 39"* | $629.64 | $629.64 | $660.60 |
| *39-1/4" to 42"* | $653.41 | $653.41 | $673.09 |
| *42-1/4" to 45"* | $682.04 | $682.04 | $706.56 |
| *45-1/4" to 48"* | $695.40 | $695.40 | $722.90 |
| **Replacement Escutcheons** | | | |
| **56-701-2-010** | 1/2" Brass Plated (Style 10) | | $22.65 |
| **56-701-9-010** | 1/2" Chrome Plated (Style 10) | | $7.26 |
| **56-701-4-010** | 1/2" Signal White (RAL 9003) (Style 10) | | $7.26 |
| **91-106-2-007** | Brass Plated (Push On) | | $15.11 |
| **91-106-9-007** | Chrome Plated (Push On) | | $14.79 |
| **91-106-0-007** | White Color (Push On) | | $14.79 |
| **91-107-2-010** | Brass - Deep | | $16.37 |
| **91-107-9-007** | Chrome - Deep | | $14.00 |
| **91-107-4-007** | White - Deep | | $14.00 |
| **Dry Sprinkler Rubber Boot Kit** | | | |
| **63-000-0-002** | DSB-2 Dry Sprinkler Boot Kit | | $188.84 |
| **Sprinkler Wrench** (Standard Pipe Wrench for pipe barrel) | | | |
| **56-850-4-001** | W-Type 7 Wrench (Recessed Only) | | $427.09 |
| **Technical Data Sheet: TFP510, Sprinkler Boot-TFP591** | | | |



*See latest Technical Data Sheets for specific Approvals, Listings, Design Parameters & available finishes. Sprinkler heads & escutcheons are priced separately unless otherwise noted.*

*Items marked **"C.O."** are made to order and may require longer delivery times. Please contact customer service for availability.*

Section 1 Standard Spray Sprinklers
Section 2 Extended Coverage Sprinklers
Section 3 Storage Sprinklers
Section 4 Residential Products
Section 5 Dry Sprinklers
Section 6 Special Sprinklers
Section 7 Nozzles and Sprinkler Accessories

## Series DS-1, Dry, Extended Coverage, Horizontal Sidewall, QR & SR, K=5.6, 3mm & 5mm Bulb

P/N 60 – XXX – X – XXX

| | C.O. | EC Sidewall 3mm Bulb (QR) |
|---|---|---|
| 351 | | 155°F (68°C) (1" NPT) |

| | C.O. | EC Sidewall 5mm Bulb (SR) |
|---|---|---|
| 951 | | 155°F (68°C) (1" NPT) |

| | Finish: Sprinkler | Finish: Escutcheon |
|---|---|---|
| 0 | Chrome | White* |
| 1 | Brass | White* |
| 2 | Brass | Brass |
| 4 | White* | White* |
| 8 | Chrome | Stainless Steel |
| 9 | Chrome | Chrome |

* Signal White (RAL 9003)

| | Length (for example) |
|---|---|
| 060 | 6.00" |
| 062 | 6.25" |
| 065 | 6.50" |
| 067 | 6.75" |
| 372 | 37.25" |
| 480 | 48.00" |

### DS-1 Extended Coverage Sidewall

*SIN (SR TY3358), (QR TY3338)*

Min. Length 2 ¾"

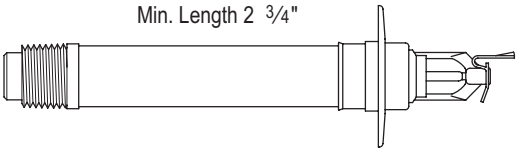

60-951-X-XXX **Extended Coverage Sidewall**
SR, w/Std. Escutcheon (1" NPT)

Min. Length 2 ¾"

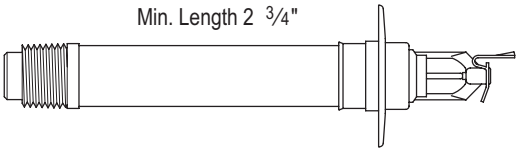

60-351-X-XXX **Extended Coverage Sidewall**
QR, w/Std. Escutcheon (1" NPT)

**Note: All Dry Sprinklers are special ordered and are Non-Returnable. Please see "Terms & Conditions"**

| *Length (48" Max)* | *(SR) EC S/W* | *(QR) EC S/W* |
|---|---|---|
| *2-¾" to 6"* | $287.95 | $335.43 |
| *6-¼" to 8"* | $382.64 | $468.99 |
| *8-¼" to 12"* | $477.33 | $499.98 |
| *12-¼" to 15"* | $500.73 | $530.97 |
| *15-¼" to 18"* | $527.15 | $548.84 |
| *18-¼" to 21"* | $548.04 | $566.72 |
| *21-¼" to 24"* | $567.09 | $575.35 |
| *24-¼" to 27"* | $593.50 | $614.32 |
| *27-¼" to 30"* | $619.90 | $632.59 |
| *30-¼" to 33"* | $646.31 | $649.34 |
| *33-¼" to 36"* | $672.72 | $684.45 |
| *36-¼" to 39"* | $699.13 | $705.94 |
| *39-¼" to 42"* | $709.63 | $727.44 |
| *42-¼" to 45"* | $729.91 | $782.72 |
| *45-¼" to 48"* | $750.19 | $838.00 |

**Replacement Escutcheons**

| | | |
|---|---|---|
| **91-106-2-007** | Brass Plated (Push On) | $15.11 |
| **91-106-9-007** | Chrome Plated (Push On) | $14.79 |
| **91-106-0-007** | White Color (Push On) | $14.79 |

**Dry Sprinkler Rubber Boot Kit**

| | | |
|---|---|---|
| **63-000-0-002** | DSB-2 Dry Sprinkler Boot Kit | $188.84 |

**Sprinkler Wrench** (Standard Pipe Wrench for pipe barrel)

| | | |
|---|---|---|
| **56-850-4-001** | W-Type 7 Wrench | $427.09 |

**Technical Data Sheet: TFP520, Sprinkler Boot-TFP591**

*Items marked **"C.O."** are made to order and may require longer delivery times. Please contact customer service for availability.*

*See latest Technical Data Sheets for specific Approvals, Listings, Design Parameters & available finishes. Sprinkler heads & escutcheons are priced separately unless otherwise noted.*

## Series DS-1, Dry, Stainless Steel, Standard Coverage, Pendent, QR or SR, K=5.6

P/N 60 – XXX – 6– XXX

| | | SIN |
|---|---|---|
| 11 | **SS Pendent QR** w/ Standard Escutcheon | TY3230 |
| 12 | **SS Pendent QR** w/ Recessed Escutcheon | TY3230 |
| 13 | **SS Pendent QR** w/ Deep Escutcheon | TY3230 |
| 14 | **SS Pendent QR** w/o Escutcheon | TY3230 |
| 21 | **SS Pendent SR** w/ Standard Escutcheon | TY3250 |
| 22 | **SS Pendent SR** w/ Recessed Escutcheon | TY3250 |
| 23 | **SS Pendent SR** w/ Deep Escutcheon | TY3250 |
| 24 | **SS Pendent SR** w/o Escutcheon | TY3250 |

| | C.O. | TEMPERATURE RATING (2) (3) |
|---|---|---|
| 1 | | 155°F (68°C) |
| 2 | ◗ | 175°F (79°C) |
| 3 | | 200°F (93°C) |
| 4 | ◗ | 286°F (141°C) |
| 5 | ◗ | 360°F (182°C) (3) |

| | Finish |
|---|---|
| 6 | Stainless Steel for Sprinkler & Escutcheon |

| ORDER LENGTH (1) EXAMPLES | |
|---|---|
| 055 | 5.50" |
| 082 | 8.25" |
| 180 | 18.00" |
| 187 | 18.75" |
| 372 | 37.25" |
| 480 | 48.00" |

**Notes:**
1. Dry-Type Sprinklers are furnished based upon "Order Length" as measured per Figures 10 through 17 in TD sheet TFP560 and for each individual sprinkler where it is to be installed. After taking the measurement, round it to the nearest 1/4" increment.
2. Temperature ratings 286°F/141°C and 360°F/182°C apply to non-recessed sprinkler assemblies.
3. Temperature rating 360°F/182°C apply to standard response, non-recessed sprinkler only (TY3250).

### DS-1 Stainless Steel, Standard Coverage, Pendent Standard Response or Quick Response

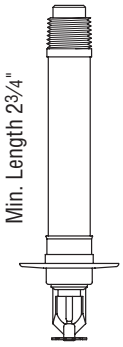


SR - 60-**21**X-X-XXX
QR - 60-**11**X-X-XXX
w/**Std. Escutcheon**

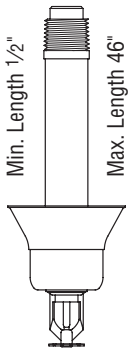


SR - 60-**23**X-X-XXX
QR - 60-**13**X-X-XXX
w/**Deep Escutcheon**

SR - 60-**22**X-X-XXX
QR - 60-**12**X-X-XXX
w/Std. **Recessed Escutcheon**

SR - 60-**24**X-X-XXX
QR - 60-**14**X-X-XXX
w/o **Escutcheon**

**Note: All Dry Sprinklers are special ordered and are Non-Returnable. Please see "Terms & Conditions"**

| *Length (48" Max)* | | *List Price* |
|---|---|---|
| *1/2" to 5-3/4"* | | $837.37 |
| *6"* | | $806.58 |
| *6-1/4" to 7-3/4"* | | $869.86 |
| *8"* | | $827.10 |
| *8-1/4" to 11-3/4"* | | $872.20 |
| *12"* | | $883.27 |
| *12-1/4" to 15"* | | $897.95 |
| *15-1/4" to 18"* | | $922.41 |
| *18-1/4" to 21"* | | $946.87 |
| *21-1/4" to 24"* | | $966.29 |
| *24-1/4" to 27"* | | $1,029.74 |
| *27-1/4" to 30"* | | $1,057.39 |
| *30-1/4" to 33"* | | $1,086.87 |
| *33-1/4" to 36"* | | $1,114.55 |
| *36-1/4" to 39"* | | $1,142.23 |
| *39-1/4" to 42"* | | $1,169.90 |
| *42-1/4" to 45"* | | $1,197.58 |
| *45-1/4" to 48"* | | $1,225.26 |
| **Replacement Escutcheon** | | |
| **56-701-1-010** | 1/2" Stainless Steel Plain (Style 10) | $44.27 |
| **91-106-8-007** | Stainless Steel Standard (Push-On) | $41.55 |
| **Dry Sprinkler Rubber Boot Kit** | | |
| **63-000-0-002** | DSB-2 Dry Sprinkler Boot Kit | $188.84 |
| **Sprinkler Wrench** (Standard Pipe Wrench for pipe barrel) | | |
| **56-850-4-001** | W-Type 7 Wrench (Recessed Only) | $427.09 |
| **Technical Data Sheet: TFP560, Sprinkler Boot-TFP591** | | |

Section 1 Standard Spray Sprinklers
Section 2 Extended Coverage Sprinklers
Section 3 Storage Sprinklers
Section 4 Residential Products
Section 5 Dry Sprinklers
Section 6 Special Sprinklers
Section 7 Nozzles and Sprinkler Accessories

*See latest Technical Data Sheets for specific Approvals, Listings, Design Parameters & available finishes. Sprinkler heads & escutcheons are priced separately unless otherwise noted.*

*Items marked **"C.O."** are made to order and may require longer delivery times. Please contact customer service for availability.*

Section 1 Standard Spray Sprinklers
Section 2 Extended Coverage Sprinklers
Section 3 Storage Sprinklers
Section 4 Residential Products
Section 5 Dry Sprinklers
Section 6 Special Sprinklers
Section 7 Nozzles and Sprinkler Accessories

## Series DS-1, Dry, Stainless Steel, Standard & Extended Coverage, Horizontal Sidewall, QR or SR, K=5.6

P/N 60 – XXX – X– XXX

| | | SIN |
|---|---|---|
| 15 | **SS HSW QR, SC** w/ Standard Escutcheon | TY3337 |
| 16 | **SS HSW QR, SC** w/ Deep Escutcheon | TY3337 |
| 17 | **SS HSW QR SC** w/o Escutcheon | TY3337 |
| 25 | **SS HSW SR, SC** w/ Standard Escutcheon | TY3357 |
| 26 | **SS HSW SR, SC** w/ Deep Escutcheon | TY3357 |
| 27 | **SS HSW SR** w/o Escutcheon | TY3357 |
| 18 | **SS HSW QR, EC** w/ Standard Escutcheon<br>Note: Available with 135°F/57°C & 155°F/68°C temperature ratings only. | TY3339 |

| | C.O. | TEMPERATURE RATING (2) (3) |
|---|---|---|
| 1 | | 155°F (68°C) |
| 2 | ◗ | 175°F (79°C) |
| 3 | | 200°F (93°C) |
| 4 | ◗ | 286°F (141°C) |
| 5 | ◗ | 360°F (182°C) (3) |

| | FINISH |
|---|---|
| 6 | Stainless Steel for Sprinkler & Escutcheon |

| ORDER LENGTH * EXAMPLES | |
|---|---|
| 055 | 5.50" |
| 082 | 8.25" |
| 180 | 18.00" |
| 187 | 18.75" |
| 372 | 37.25" |
| 480 | 48.00" |

**Notes:**
1. Dry-Type Sprinklers are furnished based upon "Order Length" and for each individual sprinkler where it is to be installed. After taking the measurement, round it to the nearest 1/4" increment.
2. Temperature ratings 286°F/141°C and 360°F/182°C apply to non-recessed sprinkler assemblies.
3. Temperature rating 360°F/182°C apply to standard response, non-recessed sprinkler only (TY3357).

### DS-1 Stainless Steel, Standard Coverage, HSW Standard Response or Quick Response

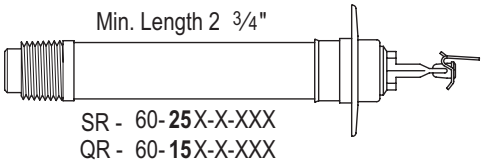


SR - 60-**25**X-X-XXX
QR - 60-**15**X-X-XXX
w/Std. Escutcheon (1" NPT)

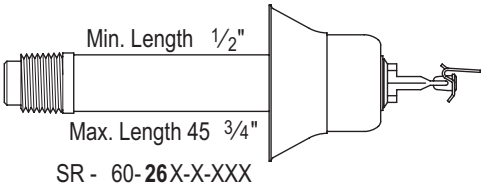


SR - 60-**26**X-X-XXX
QR - 60-**16**X-X-XXX
w/Deep Escutcheon (1" NPT)

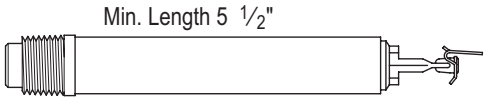


SR - 60-**27**X-X-XXX
QR - 60-**17**X-X-XXX
w/o Escutcheon (1" NPT)

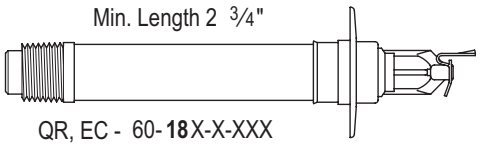


QR, EC - 60-**18**X-X-XXX
w/Std. Escutcheon (1" NPT)

**Note: All Dry Sprinklers are special ordered and are Non-Returnable. Please see "Terms & Conditions"**

| *Length (48" Max)* | | *List Price* |
|---|---|---|
| *1/2" to 5-3/4"* | | $837.37 |
| *6"* | | $806.58 |
| *6-1/4" to 7-3/4"* | | $869.86 |
| *8"* | | $827.10 |
| *8-1/4" to 11-3/4"* | | $872.20 |
| *12"* | | $883.27 |
| *12-1/4" to 15"* | | $897.95 |
| *15-1/4" to 18"* | | $922.41 |
| *18-1/4" to 21"* | | $946.87 |
| *21-1/4" to 24"* | | $966.29 |
| *24-1/4" to 27"* | | $1,029.74 |
| *27-1/4" to 30"* | | $1,057.39 |
| *30-1/4" to 33"* | | $1,086.87 |
| *33-1/4" to 36"* | | $1,114.55 |
| *36-1/4" to 39"* | | $1,142.23 |
| *39-1/4" to 42"* | | $1,169.90 |
| *42-1/4" to 45"* | | $1,197.58 |
| *45-1/4" to 48"* | | $1,225.26 |
| **Replacement Escutcheons** | | |
| **56-701-1-010** | 1/2" Stainless Steel Plain (Style 10) | $44.27 |
| **91-106-8-007** | Stainless Steel Standard (Push-On) | $41.55 |
| **Dry Sprinkler Rubber Boot Kit** | | |
| **63-000-0-002** | DSB-2 Dry Sprinkler Boot Kit | $188.84 |
| **Sprinkler Wrench** (Standard Pipe Wrench for pipe barrel) | | |
| **56-850-4-001** | W-Type 7 Wrench (Recessed Only) | $427.09 |
| **Technical Data Sheet: TFP560, Sprinkler Boot-TFP591** | | |

*Items marked **"C.O."** are made to order and may require longer delivery times. Please contact customer service for availability.*

*See latest Technical Data Sheets for specific Approvals, Listings, Design Parameters & available finishes. Sprinkler heads & escutcheons are priced separately unless otherwise noted.*

## Series DS-8, Dry, Standard Coverage, Pendent, SR, K=8.0, 5mm Bulb

P/N* 65–XXX–X–XXX

| | STANDARD RESPONSE, STANDARD COVERAGE |
|---|---|
| 96 | Standard Escutcheon (1" NPT) |
| 93 | Deep Escutcheon (1" NPT) |
| 97 | Recessed Escutcheon (1" NPT) |
| 92 | Without Escutcheon (1" NPT) |

| | TEMPERATURE RATING[2] |
|---|---|
| 1 | 155°F (68°C) |
| 2 | 175°F (79°C) |
| 3 | 200°F (93°C) |
| 4 | 286°F (141°C) |
| 5 | 360°F (182°C) |

| | SPRINKLER FINISH | ESCUTCHEON FINISH[1] |
|---|---|---|
| 0 | CHROME PLATED | SIGNAL WHITE POLYESTER |
| 1 | NATURAL BRASS | SIGNAL WHITE POLYESTER |
| 2 | NATURAL BRASS | BRASS PLATED |
| 4 | SIGNAL WHITE POLYESTER | SIGNAL WHITE POLYESTER |
| 8 | CHROME PLATED | STAINLESS STEEL |
| 9 | CHROME PLATED | CHROME PLATED |

| | ORDER LENGTH[3] |
|---|---|
| 055 | 5.50 in. |
| 082 | 8.25 in. |
| 180 | 18.00 in. |
| 187 | 18.75 in. |
| 372 | 37.25 in. |
| 480 | 48.00 in. |

**Notes:**
1. Escutcheon Finish applies to sprinklers provided with escutcheons.
2. 360°F (182°C) temperature rating applies to non-recessed sprinkler assemblies.
3. Dry-type Sprinklers are furnished based upon "Order Length" as measured per Figures 3 through 6, as applicable, and for each individual sprinkler where it is to be installed. After the measurement is taken, round it to the nearest 1/4 in. increment.

* Use Prefix "I" for ISO 7-R 1 Connection (for example, I-65-961-9-180).

### DS-8 Standard Response, *SIN TY4255*

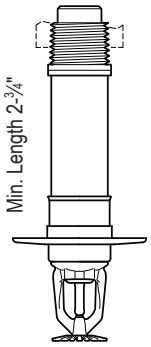


65-**96**X-X-XXX
with Standard
Escutcheon (1" NPT)

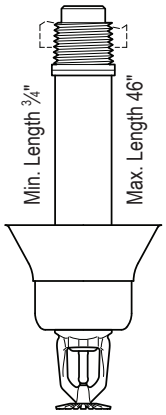


65-**93**X-X-XXX
with Deep
Escutcheon (1" NPT)

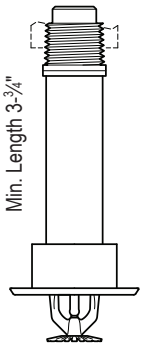


65-**97**X-X-XXX
with Recessed
Escutcheon (1" NPT)

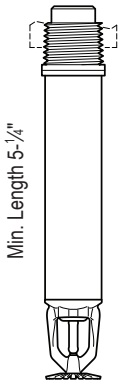


65-**92**X-X-XXX
without
Escutcheon (1" NPT)

**Note: All Dry Sprinklers are special ordered and are Non-Returnable. Please see "Terms & Conditions"**

| *Length* (48" Max) | | *List Price* |
|---|---|---|
| *3/4" to 5-3/4"* | | $380.34 |
| *6"* | | $380.34 |
| *6-1/4" to 7-3/4"* | | $385.84 |
| *8"* | | $385.84 |
| *8-1/4" to 11-3/4"* | | $400.66 |
| *12"* | | $381.47 |
| *12-1/4" to 15"* | | $460.81 |
| *15-1/4" to 18"* | | $470.40 |
| *18-1/4" to 21"* | | $490.67 |
| *21 1/4" to 24"* | | $509.60 |
| *24"-1/4" to 27"* | | $564.88 |
| *27-1/4" to 30"* | | $601.98 |
| *30-1/4" to 33"* | | $639.09 |
| *33-1/4" to 36"* | | $656.60 |
| *36-1/4" to 39"* | | $713.30 |
| *39-1/4" to 42"* | | $750.41 |
| *42-1/4" to 45"* | | $787.51 |
| *45-1/4" to 48"* | | $824.62 |
| **Replacement Escutcheons** (Recessed Outer) | | |
| **56-701-2-010** | 1/2" Brass Plated (Style 10) | $22.65 |
| **56-701-9-010** | 1/2" Chrome Plated (Style 10) | $7.26 |
| **56-701-4-010** | 1/2" Signal White (Style 10) | $7.26 |
| **91-106-2-007** | Brass Plated (Push On) | $15.11 |
| **91-106-9-007** | Chrome Plated (Push On) | $14.79 |
| **91-106-0-007** | White Color (Push On) | $14.79 |
| **91-107-2-010** | Brass - Deep | $16.37 |
| **91-107-9-007** | Chrome - Deep | $14.00 |
| **91-107-4-007** | White - Deep | $14.00 |
| **Dry Sprinkler Rubber Boot Kit** | | |
| **63-000-0-002** | DSB-2 Dry Sprinkler Boot Kit | $188.84 |
| **Sprinkler Wrench** (Standard Pipe Wrench for pipe barrel) | | |
| **56-850-4-001** | W-Type 7 Wrench (Recessed Only) | $427.09 |
| **Technical Data Sheet: TFP503, Sprinkler Boot-TFP591** | | |



*See latest Technical Data Sheets for specific Approvals, Listings, Design Parameters & available finishes. Sprinkler heads & escutcheons are priced separately unless otherwise noted.*

*Items marked **"C.O."** are made to order and may require longer delivery times. Please contact customer service for availability.*

Section 1 Standard Spray Sprinklers
Section 2 Extended Coverage Sprinklers
Section 3 Storage Sprinklers
Section 4 Residential Products
Section 5 Dry Sprinklers
Section 6 Special Sprinklers
Section 7 Nozzles and Sprinkler Accessories

## Series DS-8, Dry, Standard Coverage, Pendent, QR, K=8.0, 3mm Bulb

P/N* 65–XXX–X–XXX

| | QUICK RESPONSE, STANDARD COVERAGE |
|---|---|
| 36 | Standard Escutcheon (1" NPT) |
| 33 | Deep Escutcheon (1" NPT) |
| 37 | Recessed Escutcheon (1" NPT) |
| 32 | Without Escutcheon (1" NPT) |

| | TEMPERATURE RATING |
|---|---|
| 1 | 155°F (68°C) |
| 2 | 175°F (79°C) |
| 3 | 200°F (93°C) |
| 4 | 286°F (141°C) |

| | SPRINKLER FINISH | ESCUTCHEON FINISH[1] |
|---|---|---|
| 0 | CHROME PLATED | SIGNAL WHITE POLYESTER |
| 1 | NATURAL BRASS | SIGNAL WHITE POLYESTER |
| 2 | NATURAL BRASS | BRASS PLATED |
| 4 | SIGNAL WHITE POLYESTER | SIGNAL WHITE POLYESTER |
| 8 | CHROME PLATED | STAINLESS STEEL |
| 9 | CHROME PLATED | CHROME PLATED |

| | ORDER LENGTH[2] |
|---|---|
| 055 | 5.50 in. |
| 082 | 8.25 in. |
| 180 | 18.00 in. |
| 187 | 18.75 in. |
| 372 | 37.25 in. |
| 480 | 48.00 in. |

**Notes:**
1. Escutcheon Finish applies to sprinklers provided with escutcheons.
2. Dry-type Sprinklers are furnished based upon "Order Length" as measured per Figures 3 through 6, as applicable, and for each individual sprinkler where it is to be installed. After the measurement is taken, round it to the nearest 1/4 in. increment.

* Use Prefix "I" for ISO 7-R 1 Connection (for example, I-65-361-9-180).

### DS-8 Quick Response, *SIN TY4235*

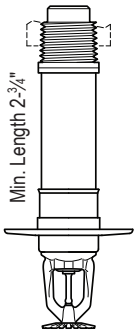


65-**36**X-X-XXX
with Standard
Escutcheon (1" NPT)

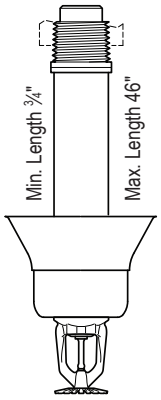


65-**33**X-X-XXX
with Deep
Escutcheon (1" NPT)

65-**37**X-X-XXX
with Recessed

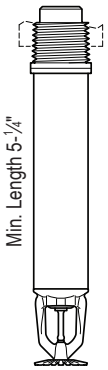


65-**32**X-X-XXX
without

**Note: All Dry Sprinklers are special ordered and are Non-Returnable. Please see "Terms & Conditions"**

| ***Length*** *(48" Max)* | | ***List Price*** |
|---|---|---|
| *3/4" to 5-3/4"* | | $421.40 |
| *6"* | | $431.20 |
| *6-1/4" to 7-3/4"* | | $441.14 |
| *8"* | | $453.23 |
| *8-1/4" to 11-3/4"* | | $470.02 |
| *12"* | | $418.13 |
| *12-1/4" to 15"* | | $492.75 |
| *15-1/4" to 18"* | | $496.35 |
| *18-1/4" to 21"* | | $533.30 |
| *21-1/4" to 24"* | | $554.80 |
| *24-1/4" to 27"* | | $576.31 |
| *27-1/4" to 30"* | | $597.82 |
| *30-1/4" to 33"* | | $619.32 |
| *33-1/4" to 36"* | | $640.83 |
| *36-1/4" to 39"* | | $658.64 |
| *39-1/4" to 42"* | | $680.14 |
| *42-1/4" to 45"* | | $700.72 |
| *45-1/4" to 48"* | | $721.31 |
| **Replacement Escutcheons** (Recessed Outer) | | |
| **56-701-2-010** | 1/2" Brass Plated (Style 10) | $22.65 |
| **56-701-9-010** | 1/2" Chrome Plated (Style 10) | $7.26 |
| **56-701-4-010** | 1/2" Signal White (Style 10) | $7.26 |
| **91-106-2-007** | Brass Plated (Push On) | $15.11 |
| **91-106-9-007** | Chrome Plated (Push On) | $14.79 |
| **91-106-0-007** | White Color (Push On) | $14.79 |
| **91-107-2-010** | Brass - Deep | $16.37 |
| **91-107-9-007** | Chrome - Deep | $14.00 |
| **91-107-4-007** | White - Deep | $14.00 |
| **Dry Sprinkler Rubber Boot Kit** | | |
| **63-000-0-002** | DSB-2 Dry Sprinkler Boot Kit | $188.84 |
| **Sprinkler Wrench** (Standard Pipe Wrench for pipe barrel) | | |
| **56-850-4-001** | W-Type 7 Wrench (Recessed Only) | $427.09 |
| **Technical Data Sheet: TFP513, Sprinkler Boot-TFP591** | | |

*Items marked **"C.O."** are made to order and may require longer delivery times. Please contact customer service for availability.*

*See latest Technical Data Sheets for specific Approvals, Listings, Design Parameters & available finishes. Sprinkler heads & escutcheons are priced separately unless otherwise noted.*

## Series DS-8, Dry, Standard Coverage, Horizontal Sidewall, SR & QR, K=8.0, 3mm & 5mm Bulb

P/N* 65 – XXX – X – XXX

| STANDARD RESPONSE | |
|---|---|
| 94 | Standard Escutcheon (1" NPT) |
| 53 | Deep Escutcheon (1" NPT) |
| 55 | Recessed Escutcheon (1" NPT) |
| 54 | Without Escutcheon (1" NPT) |

| QUICK RESPONSE | |
|---|---|
| 34 | Standard Escutcheon (1" NPT) |
| 43 | Deep Escutcheon (1" NPT) |
| 45 | Recessed Escutcheon (1" NPT) |
| 44 | Without Escutcheon (1" NPT) |

| TEMPERATURE RATING | |
|---|---|
| 1 | 155°F (68°C) |
| 3 | 200°F (93°C) |
| 4 | 286°F (141°C) |

| | SPRINKLER FINISH | ESCUTCHEON FINISH[1] |
|---|---|---|
| 0 | CHROME PLATED | SIGNAL WHITE POLYESTER |
| 1 | NATURAL BRASS | SIGNAL WHITE POLYESTER |
| 2 | NATURAL BRASS | BRASS PLATED |
| 4 | SIGNAL WHITE POLYESTER | SIGNAL WHITE POLYESTER |
| 8 | CHROME PLATED | STAINLESS STEEL[2] |
| 9 | CHROME PLATED | CHROME PLATED |

| ORDER LENGTH[3] | |
|---|---|
| 055 | 5.50 in. |
| 082 | 8.25 in. |
| 180 | 18.00 in. |
| 187 | 18.75 in. |
| 372 | 37.25 in. |
| 480 | 48.00 in. |

**Notes:**
1. Escutcheon Finish applies to sprinklers provided with escutcheons.
2. The stainless steel escutcheon finish is available for the pendent sprinkler only.
3. Dry-type sprinklers are furnished based upon "Order Length" as measured, for each individual sprinkler where it is to be installed. After the measurement is taken, round it to the nearest 1/4 in. increment.

* Use Prefix "I" for ISO 7-R 1 Connection (for example, I-65-361-9-180).

### DS-8, SR - *SIN TY4355*, QR - *SIN TY4335*

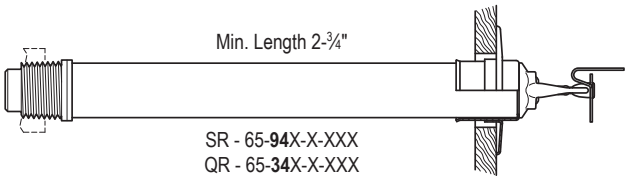


SR - 65-**94**X-X-XXX
QR - 65-**34**X-X-XXX
with Standard Escutcheon (1" NPT)

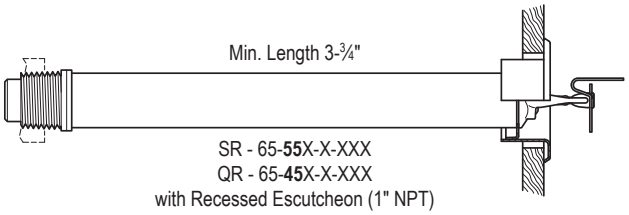


SR - 65-**55**X-X-XXX
QR - 65-**45**X-X-XXX
with Recessed Escutcheon (1" NPT)

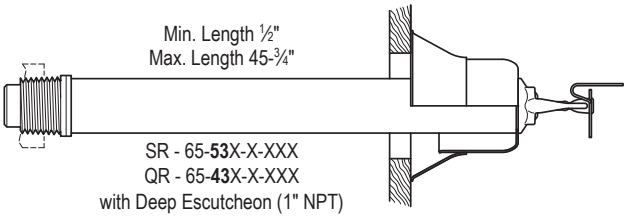


SR - 65-**53**X-X-XXX
QR - 65-**43**X-X-XXX
with Deep Escutcheon (1" NPT)

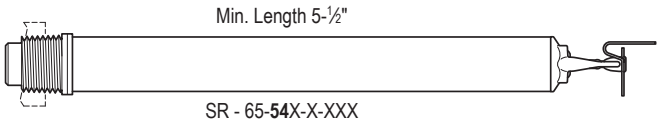


SR - 65-**54**X-X-XXX
QR - 65-**44**X-X-XXX
without Escutcheon (1" NPT)

**Note: All Dry Sprinklers are special ordered and are Non-Returnable. Please see "Terms & Conditions"**

| *Length* (48" Max) | *SR - List Price* | *QR - List Price* |
|---|---|---|
| *½" to 5-¾"* | $409.43 | $447.21 |
| *6"* | $406.26 | $443.44 |
| *6-¼" to 7-¾"* | $431.10 | $470.77 |
| *8"* | $427.94 | $460.18 |
| *8-¼" to 11-¾"* | $450.93 | $499.89 |
| *12"* | $447.77 | $484.34 |
| *12-¼" to 15"* | $490.60 | $522.82 |
| *15-¼" to 18"* | $516.00 | $563.72 |
| *18-¼" to 21"* | $534.60 | $574.57 |
| *21¼" to 24"* | $558.14 | $585.42 |
| *24"-¼" to 27"* | $582.32 | $605.86 |
| *27-¼" to 30"* | $602.13 | $628.16 |
| *30-¼" to 33"* | $618.24 | $647.39 |
| *33-¼" to 36"* | $644.90 | $670.32 |
| *36-¼" to 39"* | $664.10 | $690.13 |
| *39-¼" to 42"* | $683.33 | $711.82 |
| *42-¼" to 45"* | $701.30 | $734.13 |
| *45-¼" to 48"* | $721.11 | $753.35 |

| **Replacement Escutcheons** (Recessed Outer) | | |
|---|---|---|
| **56-701-2-010** | ½" Brass Plated (Style 10) | $22.65 |
| **56-701-9-010** | ½" Chrome Plated (Style 10) | $7.26 |
| **56-701-4-010** | ½" Signal White (Style 10) | $7.26 |
| **91-106-2-007** | Brass Plated (Push On) | $15.11 |
| **91-106-9-007** | Chrome Plated (Push On) | $14.79 |
| **91-106-0-007** | White Color (Push On) | $14.79 |
| **91-107-2-010** | Brass - Deep | $16.37 |
| **91-107-9-007** | Chrome - Deep | $14.00 |
| **91-107-4-007** | White - Deep | $14.00 |
| **Dry Sprinkler Rubber Boot Kit** | | |
| **63-000-0-002** | DSB-2 Dry Sprinkler Boot Kit | $188.84 |
| **Sprinkler Wrench** (Standard Pipe Wrench for pipe barrel) | | |
| **56-850-4-001** | W-Type 7 Wrench (Recessed Only) | $427.09 |

**Technical Data: SR - TFP503, QR - TFP513, Sprinkler Boot-TFP591**



*See latest Technical Data Sheets for specific Approvals, Listings, Design Parameters & available finishes. Sprinkler heads & escutcheons are priced separately unless otherwise noted.*

*Items marked **"C.O."** are made to order and may require longer delivery times. Please contact customer service for availability.*

Section 1 Standard Spray Sprinklers
Section 2 Extended Coverage Sprinklers
Section 3 Storage Sprinklers
Section 4 Residential Products
Section 5 Dry Sprinklers
Section 6 Special Sprinklers
Section 7 Nozzles and Sprinkler Accessories

## Series DS-2, ELO Dry, Standard Coverage, Pendent, SR, K=11.2, 5mm Bulb

P/N 61 – XXX – X – XXX

| | Pendent |
|---|---|
| 10 | w/Flush Escutcheon |
| 11 | w/Recessed Escutcheon |
| 12 | w/Deep Escutcheon |
| 13 | w/o Escutcheon |

| | C.O. | Temperature |
|---|---|---|
| 1 | | 155°F (68°C) |
| 2 | ◗ | 175°F (79°C) |
| 3 | | 200°F (93°C) |
| 4 | | 286°F (141°C) |

| | Finish: Sprinkler | Finish: Escutcheon |
|---|---|---|
| 1 | Brass | White* |
| 4 | White* | White* |
| 9 | Chrome | Chrome |
| 0 | Chrome | White* |
| 5 | Brass | Brass |

* Signal White (RAL 9003)

| | Length (for example) |
|---|---|
| 060 | 6.00" |
| 062 | 6.25" |
| 065 | 6.50" |
| 067 | 6.75" |
| 372 | 37.25" |
| 480 | 48.00" |

### DS-2 Standard Response
*SIN TY5255*

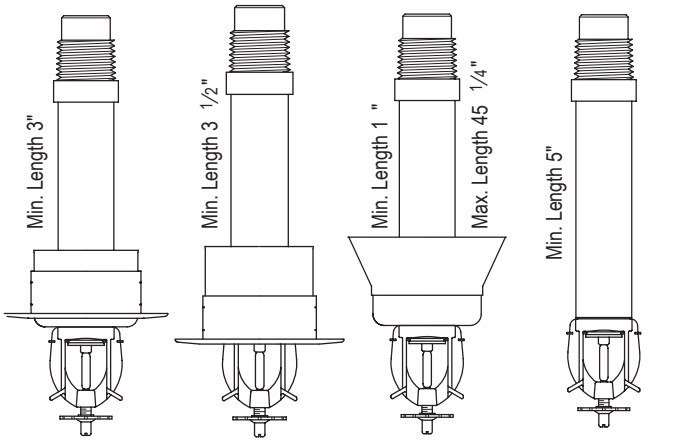


61-**10**X-X-XXX w/ **Flush Escutcheon** | 61-**11**X-X-XXX w/ **Recessed Escutcheon** | 61-**12**X-X-XXX w/ **Deep Escutcheon** | 61-**13**X-X-XXX w/o **Escutcheon**

**Note: All Dry Sprinklers are special ordered and are Non-Returnable. Please see "Terms & Conditions"**

| *Length (48" Max)* | | *List Price* |
|---|---|---|
| *1" to 6"* | | $770.59 |
| *6-1/4" to 8"* | | $845.38 |
| *8-1/4" to 12"* | | $863.69 |
| *12-1/4" to 15"* | | $868.40 |
| *15-1/4" to 18"* | | $947.66 |
| *18-1/4" to 21"* | | $951.20 |
| *21-1/4" to 24"* | | $954.73 |
| *24-1/4" to 27"* | | $1,058.77 |
| *27-1/4" to 30"* | | $1,097.98 |
| *30-1/4" to 33"* | | $1,112.30 |
| *33-1/4" to 36"* | | $1,173.45 |
| *36-1/4" to 39"* | | $1,278.08 |
| *39-1/4" to 42"* | | $1,279.83 |
| *42-1/4" to 45"* | | $1,281.57 |
| *45-1/4" to 48"* | | $1,342.88 |
| **Replacement Outer Escutcheon Ring** | | |
| **854912** | Chrome Plated - Flush & Recessed | $23.27 |
| **854902** | Flush White Color - Flush & Recessed | $33.51 |
| **854822** | Brass Plated - Deep | $22.61 |
| **854812** | Chrome Plated - Deep | $18.09 |
| **854802** | White Color - Deep | $22.61 |
| **Dry Sprinkler Rubber Boot Kit** | | |
| **63-000-0-002** | DSB-2 Dry Sprinkler Boot Kit | $188.84 |
| **Sprinkler Pipe Wrench** (Standard Pipe Wrench for pipe barrel) | | |
| **56-010-4-118** | W-Type 17 Wrench (Recessed Only) | $365.78 |
| **Technical Data Sheet: TFP530, Sprinkler Boot-TFP591** | | |

*Items marked **"C.O."** are made to order and may require longer delivery times. Please contact customer service for availability.*

*See latest Technical Data Sheets for specific Approvals, Listings, Design Parameters & available finishes. Sprinkler heads & escutcheons are priced separately unless otherwise noted.*

## Series DS-2, ELO Dry, Standard Coverage, Pendent, QR, K=11.2, 3mm Bulb

P/N 61 – XXX – X – XXX

| | Pendent |
|---|---|
| 30 | w/Flush Escutcheon |
| 31 | w/Recessed Escutcheon |
| 32 | w/Extended Escutcheon |
| 35 | w/o Escutcheon |

| | C.O. | Temperature |
|---|---|---|
| 1 | | 155°F (68°C) |
| 2 | ◗ | 175°F (79°C) |
| 3 | | 200°F (93°C) |
| 4 | | 286°F (141°C) |

| | Finish Sprinkler | Finish Escutcheon |
|---|---|---|
| 1 | Brass | White* |
| 4 | White* | White* |
| 9 | Chrome | Chrome |
| 0 | Chrome | White* |
| 5 | Brass | Brass |

* Signal White (RAL 9003)

| | Length (for example) |
|---|---|
| 060 | 6.00" |
| 062 | 6.25" |
| 065 | 6.50" |
| 067 | 6.75" |
| 372 | 37.25" |
| 480 | 48.00" |

### DS-2 Quick Response, Standard Coverage

*SIN TY5235*

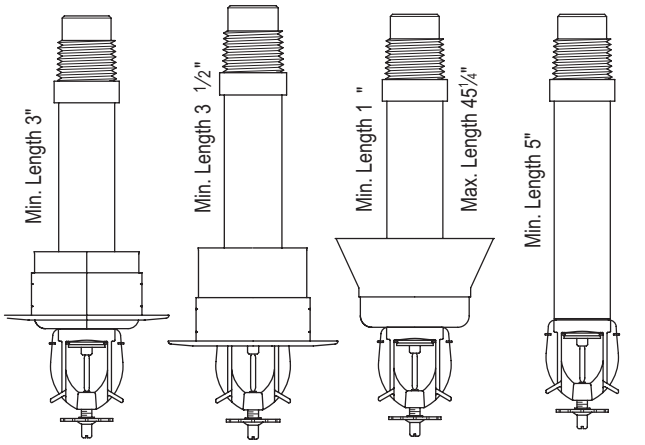


**61-30** X-X-XXX w/ **Flush Escutcheon**

**61-31** X-X-XXX w/ **Recessed Escutcheon**

**61-32** X-X-XXX w/ **Extended Escutcheon**

**61-35** X-X-XXX w/o **Escutcheon**

**Note: All Dry Sprinklers are special ordered and are Non-Returnable. Please see "Terms & Conditions"**

| *Length (48" Max)* | *List Price* |
|---|---|
| *1" to 6"* | $770.59 |
| *6-¼" to 8"* | $845.38 |
| *8-¼" to 12"* | $863.69 |
| *12-¼" to 15"* | $868.40 |
| *15-¼" to 18"* | $947.66 |
| *18-¼" to 21"* | $951.20 |
| *21-¼" to 24"* | $954.73 |
| *24-¼" to 27"* | $1,058.77 |
| *27-¼" to 30"* | $1,097.98 |
| *30-¼" to 33"* | $1,112.30 |
| *33-¼" to 36"* | $1,173.45 |
| *36-¼" to 39"* | $1,278.08 |
| *39-¼" to 42"* | $1,279.83 |
| *42-¼" to 45"* | $1,281.57 |
| *45-¼" to 48"* | $1,342.88 |

| **Replacement Escutcheons** (Recessed Outer) | | |
|---|---|---|
| **854912** | Chrome Plated - Flush | $23.27 |
| **854902** | Flush White Color - Flush | $33.51 |
| **854822** | Brass Plated - Deep | $22.61 |
| **854812** | Chrome Plated - Deep | $18.09 |
| **854802** | White Color - Deep | $22.61 |
| **Dry Sprinkler Rubber Boot Kit** | | |
| **63-000-0-002** | DSB-2 Dry Sprinkler Boot Kit | $188.84 |
| **Sprinkler Wrench** (Standard Pipe Wrench for pipe barrel) | | |
| **56-010-4-118** | W-Type 17 Wrench | $365.78 |

**Technical Data Sheet: TFP530, Sprinkler Boot-TFP591**



*See latest Technical Data Sheets for specific Approvals, Listings, Design Parameters & available finishes. Sprinkler heads & escutcheons are priced separately unless otherwise noted.*

*Items marked **"C.O."** are made to order and may require longer delivery times. Please contact customer service for availability.*

Section 1 Standard Spray Sprinklers
Section 2 Extended Coverage Sprinklers
Section 3 Storage Sprinklers
Section 4 Residential Products
Section 5 Dry Sprinklers
Section 6 Special Sprinklers
Section 7 Nozzles and Sprinkler Accessories

## Series DS-2, ELO Dry, Extended Coverage, Pendent, QR & SR, K=11.2, 3mm Bulb

P/N 61 – XXX – X – XXX

| | Pendent |
|---|---|
| 40 | w/Flush Escutcheon |
| 41 | w/Recessed Escutcheon |
| 42 | w/Extended Escutcheon |
| 43 | w/o Escutcheon |

| | C.O. | Temperature |
|---|---|---|
| 1 | | 155°F (68°C) |
| 2 | ◗ | 175°F (79°C) |
| 3 | | 200°F (93°C) |
| 4 | | 286°F (141°C) |

| | Finish Sprinkler | Finish Escutcheon |
|---|---|---|
| 1 | Brass | White* |
| 4 | White* | White* |
| 9 | Chrome | Chrome |
| 0 | Chrome | White* |
| 5 | Brass | Brass |

* Signal White (RAL 9003)

| | Length (for example) |
|---|---|
| 060 | 6.00" |
| 062 | 6.25" |
| 065 | 6.50" |
| 067 | 6.75" |
| 372 | 37.25" |
| 480 | 48.00" |

### DS-2 Extended Coverage
*SIN TY5238*

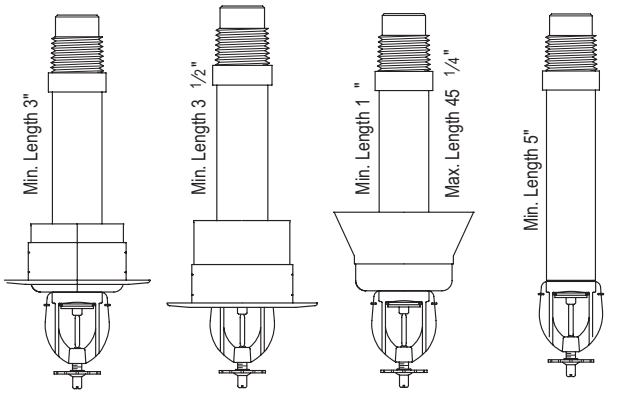


**61-40** X-X-XXX w/ **Flush Escutcheon** | **61-41** X-X-XXX w/ **Recessed Escutcheon** | **61-42** X-X-XXX w/ **Extended Escutcheon** | **61-43** X-X-XXX w/o **Escutcheon**

**Note: All Dry Sprinklers are special ordered and are Non-Returnable. Please see "Terms & Conditions"**

| *Length (48" Max)* | | *List Price* |
|---|---|---|
| *1" to 6"* | | $990.33 |
| *6-1/4" to 8"* | | $1,024.93 |
| *8-1/4" to 12"* | | $1,041.84 |
| *12-1/4" to 15"* | | $1,094.24 |
| *15-1/4" to 18"* | | $1,131.52 |
| *18-1/4" to 21"* | | $1,148.49 |
| *21-1/4" to 24"* | | $1,186.23 |
| *24-1/4" to 27"* | | $1,240.41 |
| *27-1/4" to 30"* | | $1,277.87 |
| *30-1/4" to 33"* | | $1,309.68 |
| *33-1/4" to 36"* | | $1,344.83 |
| *36-1/4" to 39"* | | $1,360.32 |
| *39-1/4" to 42"* | | $1,375.82 |
| *42-1/4" to 45"* | | $1,460.89 |
| *45-1/4" to 48"* | | $1,487.27 |
| **Replacement Escutcheons** | | |
| **854912** | Chrome Plated - Flush | $23.27 |
| **854902** | Flush White Color - Flush | $33.51 |
| **854822** | Brass Plated - Deep | $22.61 |
| **854812** | Chrome Plated - Deep | $18.09 |
| **854802** | White Color - Deep | $22.61 |
| **Dry Sprinkler Rubber Boot Kit** | | |
| **63-000-0-002** | DSB-2 Dry Sprinkler Boot Kit | $188.84 |
| **Sprinkler Wrench** (Standard Pipe Wrench for pipe barrel) | | |
| **56-010-4-118** | W-Type 17 Wrench | $365.78 |

**Notes**

*Quick response or standard response is dependent on hazard.*
*See technical data sheet for additional information.*

**Technical Data Sheet: TFP540, Sprinkler Boot-TFP591**

*Items marked **"C.O."** are made to order and may require longer delivery times. Please contact customer service for availability.*

*See latest Technical Data Sheets for specific Approvals, Listings, Design Parameters & available finishes. Sprinkler heads & escutcheons are priced separately unless otherwise noted.*

## Series DS-3, Dry, Extended Coverage Ordinary Hazard (ECOH), Horizontal Sidewall, 1" NPT, K=11.2, 3mm bulb

P/N 61 — XXX — X — XXX

| | | MODEL/SIN |
|---|---|---|
| 161 | **Flush Escutcheon** (1"NPT), 155°F (68°C) | TY5339 |
| 163 | **Flush Escutcheon** (1"NPT), 200°F (93°C) | TY5339 |
| 171 | **Deep Escutcheon Skirt** (1"NPT), 155°F (68°C) | TY5339 |
| 173 | **Deep Escutcheon Skirt** (1"NPT), 200°F (93°C) | TY5339 |
| 151 | **Without Escutcheon** (1"NPT), 155°F (68°C) | TY5339 |
| 153 | **Without Escutcheon** (1"NPT), 200°F (93°C) | TY5339 |

| | SPRINKLER FINISH | ESCUTCHEON FINISH (2) |
|---|---|---|
| 1 | NATURAL BRASS | BRASS PLATED |
| 4 | WHITE * | WHITE * |
| 9 | CHROME PLATED | CHROME PLATED |
| 0 | CHROME PLATED | WHITE * |

* Signal White (RAL 9003)

| | ORDER LENGTH (1) (EXAMPLES) |
|---|---|
| 055 | 5.50" |
| 082 | 8.25" |
| 180 | 18.00" |
| 187 | 18.75" |
| 372 | 37.25" |
| 480 | 48.00" |

### DS-3 Extended Coverage Ordinary Hazard Sidewall
*SIN (TY5339)*

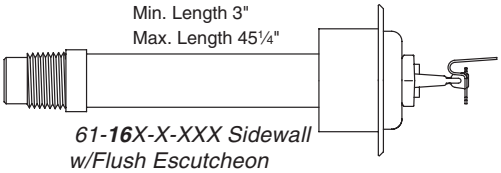


*61-**16**X-X-XXX Sidewall w/Flush Escutcheon*

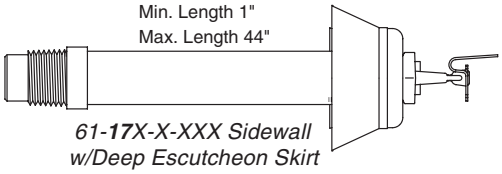


*61-**17**X-X-XXX Sidewall w/Deep Escutcheon Skirt*

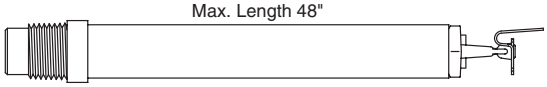


*61-**15**X-X-XXX Sidewall w/o Escutcheon*

**Note: All Dry Sprinklers are special ordered and are Non-Returnable. Please see "Terms & Conditions"**

| *Length* (48" Max) | | *ECOH S/W* |
|---|---|---|
| *1" to 6"* | | $911.16 |
| *6-¼" to 8"* | | $931.20 |
| *8-¼" to 12"* | | $951.24 |
| *12-¼" to 15"* | | $978.24 |
| *15-¼" to 18"* | | $1,003.99 |
| *18-¼" to 21"* | | $1,026.78 |
| *21-¼" to 24"* | | $1,048.29 |
| *24-¼" to 27"* | | $1,077.05 |
| *27-¼" to 30"* | | $1,102.41 |
| *30-¼" to 33"* | | $1,129.74 |
| *33-¼" to 36"* | | $1,151.44 |
| *36-¼" to 39"* | | $1,179.74 |
| *39-¼" to 42"* | | $1,203.79 |
| *42-¼" to 45"* | | $1,227.83 |
| *45-¼" to 48"* | | $1,247.64 |
| **Replacement Escutcheons** | | |
| **854912** | Chrome Plated - Flush | $23.27 |
| **854902** | Flush White Color - Flush | $33.51 |
| **854822** | Brass Plated - Deep | $22.61 |
| **854812** | Chrome Plated - Deep | $18.09 |
| **854802** | White Color - Deep | $22.61 |
| **Dry Sprinkler Rubber Boot Kit** | | |
| **63-000-0-002** | DSB-2 Dry Sprinkler Boot Kit | $188.84 |
| **Sprinkler Wrench** (Standard Pipe Wrench for pipe barrel) | | |
| **56-892-1-001** | W-Type 8 Wrench | $424.81 |
| **Technical Data Sheet: TFP550, Sprinkler Boot-TFP591** | | |

Section 1 Standard Spray Sprinklers
Section 2 Extended Coverage Sprinklers
Section 3 Storage Sprinklers
Section 4 Residential Products
Section 5 Dry Sprinklers
Section 6 Special Sprinklers
Section 7 Nozzles and Sprinkler Accessories

## Series DS-C, Dry Concealed, Standard Response, K=5.6, 5mm Bulb

### DS-C SR Concealed
*SIN TY3555*

P/N 60 – 86 X – 1 – XXX

| | C.O. | Temperature |
|---|---|---|
| 1 | | 155°F (68°C) |
| 3 | | 200°F (93°C) |

| | Length (for example) |
|---|---|
| 060 | 6.00" |
| 062 | 6.25" |
| 065 | 6.50" |
| 067 | 6.75" |
| 372 | 37.25" |
| 480 | 48.00" |

60- **86**X-1-XXX

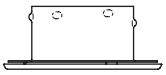

Cover Plate
(Order Separately)

**Note: All Dry Sprinklers are special ordered and are Non-Returnable.**
**Please see "Terms & Conditions"**
**Note: All Dry Sprinklers are 4 7/8" Min. Length and 48" Max.**

| C.O. | Length (48" Max) | | | List Price |
|---|---|---|---|---|
| | *5" to 8"* | | | $432.04 |
| | *8-1/4" to 12"* | | | $456.83 |
| | *12-1/4" to 15"* | | | $493.27 |
| | *15-1/4" to 18"* | | | $514.24 |
| | *18-1/4" to 21"* | | | $556.19 |
| | *21-1/4" to 24"* | | | $588.64 |
| | *24-1/4" to 27"* | | | $600.57 |
| | *27-1/4" to 30"* | | | $612.50 |
| | *30-1/4" to 33"* | | | $638.57 |
| | *33-1/4" to 36"* | | | $661.43 |
| | *36-1/4" to 39"* | | | $689.28 |
| | *39-1/4" to 42"* | | | $748.98 |
| | *42-1/4" to 45"* | | | $780.31 |
| | *45-1/4" to 48"* | | | $808.56 |
| **Cover Plates** | | | | |
| *80 Box Quantity (14.5 lbs/box)* | | | | |
| **Cover Plate (For use with 155° F Sprinkler)** | | | | |
| | **56-792-1-135** | *Brushed Brass* | *139°F (59°C)* | $62.04 |
| ◗ | **56-792-2-135** | *Brass* | *139°F (59°C)* | $68.87 |
| ◗ | **56-792-8-135** | *Brushed Chrome* | *139°F (59°C)* | $68.87 |
| | **56-792-9-135** | *Chrome* | *139°F (59°C)* | $23.29 |
| | **56-792-0-135** | *Grey White (RAL 9002)* | *139°F (59°C)* | $23.29 |
| | **56-792-4-135** | *Signal White (RAL 9003)* | *139°F (59°C)* | $23.29 |
| | **56-792-6-135** | *Jet Black (RAL 9005)* | *139°F (59°C)* | $62.04 |
| | **56-792-7-135** | Terra Brown (RAL 8082) | *139°F (59°C)* | $62.04 |
| **Cover Plate (For use with 200° F Sprinkler)** | | | | |
| | **56-792-1-165** | *Brushed Brass* | *165°F (74°C)* | $62.04 |
| ◗ | **56-792-2-165** | *Brass* | *165°F (74°C)* | $68.87 |
| ◗ | **56-792-8-165** | *Brushed Chrome* | *165°F (74°C)* | $68.87 |
| | **56-792-9-165** | *Chrome* | *165°F (74°C)* | $23.29 |
| | **56-792-0-165** | *Grey White (RAL 9002)* | *165°F (74°C)* | $23.29 |
| | **56-792-4-165** | *Signal White (RAL 9003)* | *165°F (74°C)* | $23.29 |
| | **56-792-6-165** | *Jet Black (RAL 9005)* | *165°F (74°C)* | $62.04 |
| | **56-792-7-165** | Terra Brown (RAL 8082) | *165°F (74°C)* | $62.04 |
| **Notes** | | | | |
| ◗ | **6012** | *Special order paint match subject to set-up charge. (Net Price) | | $630.79 |
| **Dry Sprinkler Rubber Boot Kit** | | | | |
| | **63-000-0-002** | DSB-2 Dry Sprinkler Boot Kit | | $188.84 |
| **Sprinkler Wrench** (Standard Pipe Wrench for pipe barrel) | | | | |
| | **56-000-1-075** | RFII Wrench | | $427.45 |
| **Technical Data Sheet: TFP515, Sprinkler Boot-TFP591** | | | | |

*Items marked **"C.O."** are made to order and may require longer delivery times. Please contact customer service for availability.*

*See latest Technical Data Sheets for specific Approvals, Listings, Design Parameters & available finishes. Sprinkler heads & escutcheons are priced separately unless otherwise noted.*

## Series DS-C, Dry Concealed, Quick Response, K=5.6, 3mm Bulb

### DS-C QR Concealed
*SIN TY3535*

P/N 60 – 46 X – 1 – XXX

| | C.O. | Temperature |
|---|---|---|
| 1 | | 155°F (68°C) |
| 3 | | 200°F (93°C) |

| | Length (for example) |
|---|---|
| 060 | 6.00" |
| 062 | 6.25" |
| 065 | 6.50" |
| 067 | 6.75" |
| 372 | 37.25" |
| 480 | 48.00" |

60- **46** X-1-XXX

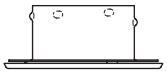

Cover Plate
(Order Separately)

**Note: All Dry Sprinklers are special ordered and are Non-Returnable.**
**Please see "Terms & Conditions"**
**Note: All Dry Sprinklers are 4 7/8" Min. Length and 48" Max.**

| C.O. | Length (48" Max) | | | List Price |
|---|---|---|---|---|
| | *5" to 8"* | | | $429.50 |
| | *8-1/4" to 12"* | | | $470.60 |
| | *12-1/4" to 15"* | | | $490.49 |
| | *15-1/4" to 18"* | | | $502.08 |
| | *18-1/4" to 21"* | | | $543.76 |
| | *21-1/4" to 27"* | | | $564.98 |
| | *27-1/4" to 30"* | | | $587.94 |
| | *30-1/4" to 33"* | | | $596.66 |
| | *33-1/4" to 36"* | | | $605.39 |
| | *36-1/4" to 39"* | | | $625.03 |
| | *39-1/4" to 42"* | | | $644.67 |
| | *42-1/4" to 45"* | | | $664.31 |
| | *45-1/4" to 48"* | | | $683.95 |
| **Cover Plates** | | | | |
| *80 Box Quantity (14.5 lbs/box)* | | | | |
| **Cover Plate (For use with 155° F Sprinkler)** | | | | |
| | **56-792-1-135** | *Brushed Brass* | *139°F (59°C)* | $62.04 |
| ◗ | **56-792-2-135** | *Brass* | *139°F (59°C)* | $68.87 |
| ◗ | **56-792-8-135** | *Brushed Chrome* | *139°F (59°C)* | $68.87 |
| | **56-792-9-135** | *Chrome* | *139°F (59°C)* | $23.29 |
| | **56-792-0-135** | *Grey White (RAL9002)* | *139°F (59°C)* | $23.29 |
| | **56-792-4-135** | *Signal White (RAL 9003)* | *139°F (59°C)* | $23.29 |
| | **56-792-6-135** | *Jet Black (RAL 9005)* | *139°F (59°C)* | $62.04 |
| | **56-792-7-135** | Terra Brown (RAL 8082) | *139°F (59°C)* | $62.04 |
| **Cover Plate (For use with 200° F Sprinkler)** | | | | |
| | **56-792-1-165** | *Brushed Brass* | *165°F (74°C)* | $62.04 |
| ◗ | **56-792-2-165** | *Brass* | *165°F (74°C)* | $68.87 |
| ◗ | **56-792-8-165** | *Brushed Chrome* | *165°F (74°C)* | $68.87 |
| | **56-792-9-165** | *Chrome* | *165°F (74°C)* | $23.29 |
| | **56-792-0-165** | *Grey White (RAL9002)* | *165°F (74°C)* | $23.29 |
| | **56-792-4-165** | *Signal White (RAL 9003)* | *165°F (74°C)* | $23.29 |
| | **56-792-6-165** | *Jet Black (RAL 9005)* | *165°F (74°C)* | $62.04 |
| | **56-792-7-165** | Terra Brown (RAL 8082) | *165°F (74°C)* | $62.04 |
| **Notes** | | | | |
| ◗ | **6012** | *Special order paint match subject to set-up charge. (Net Price) | | $630.79 |
| **Dry Sprinkler Rubber Boot Kit** | | | | |
| | **63-000-0-002** | DSB-2 Dry Sprinkler Boot Kit | | $188.84 |
| **Sprinkler Wrench** (Standard Pipe Wrench for pipe barrel) | | | | |
| | **56-000-1-075** | RFII Wrench | | $427.45 |
| **Technical Data Sheet: TFP515, Sprinkler Boot-TFP591** | | | | |



*See latest Technical Data Sheets for specific Approvals, Listings, Design Parameters & available finishes. Sprinkler heads & escutcheons are priced separately unless otherwise noted.*

*Items marked **"C.O."** are made to order and may require longer delivery times. Please contact customer service for availability.*

Section 1 Standard Spray Sprinklers
Section 2 Extended Coverage Sprinklers
Section 3 Storage Sprinklers
Section 4 Residential Products
Section 5 Dry Sprinklers
Section 6 Special Sprinklers
Section 7 Nozzles and Sprinkler Accessories

## Series DS-ECC, Dry Extended Concealed Coverage, Quick Response, K=5.6, 3mm Bulb

### DS-ECC Extended Concealed Coverage

*SIN TY3539*

P/N 60 – 45 X – 1 – XXX

| | C.O. | Temperature |
|---|---|---|
| 1 | | 155°F (68°C) |
| 3 | | 200°F (93°C) |

| | Length (for example) |
|---|---|
| 060 | 6.00" |
| 062 | 6.25" |
| 065 | 6.50" |
| 067 | 6.75" |
| 372 | 37.25" |
| 480 | 48.00" |

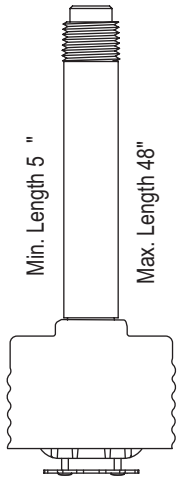


60- **45**X-1-XXX

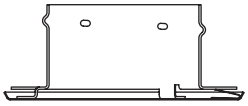

Cover Plate
(Order Separately)

**Note: All Dry Sprinklers are special ordered and are Non-Returnable.**
**Please see "Terms & Conditions"**

**Note: All Dry Sprinklers are 4 7/8" Min. Length and 48" Max.**

| C.O. | Length (48" Max) | | | List Price |
|---|---|---|---|---|
| | *5" to 8"* | | | $738.12 |
| | *8-1/4" to 12"* | | | $805.57 |
| | *12-1/4" to 15"* | | | $853.30 |
| | *15-1/4" to 18"* | | | $893.24 |
| | *18-1/4" to 21"* | | | $935.33 |
| | *21-1/4" to 24"* | | | $992.42 |
| | *24-1/4" to 27"* | | | $1,024.31 |
| | *27-1/4" to 30"* | | | $1,056.20 |
| | *30-1/4" to 33"* | | | $1,098.63 |
| | *33-1/4" to 36"* | | | $1,149.56 |
| | *36-1/4" to 39"* | | | $1,197.64 |
| | *39-1/4" to 42"* | | | $1,241.03 |
| | *42-1/4" to 45"* | | | $1,284.41 |
| | *45-1/4" to 48"* | | | $1,327.80 |
| **Cover Plates** | | | | |
| *80 Box Quantity (14.5 lbs/box)* | | | | |
| **Cover Plate (For use with 155° F Sprinkler)** | | | | |
| | **56-792-1-135** | *Brushed Brass* | *139°F (59°C)* | $62.04 |
| ◗ | **56-792-2-135** | *Brass* | *139°F (59°C)* | $68.87 |
| ◗ | **56-792-8-135** | *Brushed Chrome* | *139°F (59°C)* | $68.87 |
| | **56-792-9-135** | *Chrome* | *139°F (59°C)* | $23.29 |
| | **56-792-0-135** | *Grey White (RAL 9002)* | *139°F (59°C)* | $23.29 |
| | **56-792-4-135** | *Signal White (RAL 9003)* | *139°F (59°C)* | $23.29 |
| | **56-792-6-135** | *Jet Black (RAL 9005)* | *139°F (59°C)* | $62.04 |
| | **56-792-7-135** | Terra Brown (RAL 8082) | *139°F (59°C)* | $62.04 |
| **Cover Plate (For use with 200° F Sprinkler)** | | | | |
| | **56-792-1-165** | *Brushed Brass* | *165°F (74°C)* | $62.04 |
| ◗ | **56-792-2-165** | *Brass* | *165°F (74°C)* | $68.87 |
| ◗ | **56-792-8-165** | *Brushed Chrome* | *165°F (74°C)* | $68.87 |
| | **56-792-9-165** | *Bright Chrome* | *165°F (74°C)* | $23.29 |
| | **56-792-0-165** | *Grey White (RAL 9002)* | *165°F (74°C)* | $23.29 |
| | **56-792-4-165** | *Signal White (RAL 9003)* | *165°F (74°C)* | $23.29 |
| | **56-792-6-165** | *Jet Black (RAL 9005)* | *165°F (74°C)* | $62.04 |
| | **56-792-7-165** | Terra Brown (RAL 8082) | *165°F (74°C)* | $62.04 |
| **Notes** | | | | |
| ◗ | **6012** | *Special order paint match subject to set-up charge. (Net Price) | | $630.79 |
| **Dry Sprinkler Rubber Boot Kit** | | | | |
| | **63-000-0-002** | DSB-2 Dry Sprinkler Boot Kit | | $188.84 |
| **Sprinkler Wrench** (Standard Pipe Wrench for pipe barrel) | | | | |
| | **56-000-1-075** | RFII Wrench | | $427.45 |

**Technical Data Sheet: TFP518, Sprinkler Boot-TFP591**

*Items marked **"C.O."** are made to order and may require longer delivery times. Please contact customer service for availability.*

*See latest Technical Data Sheets for specific Approvals, Listings, Design Parameters & available finishes. Sprinkler heads & escutcheons are priced separately unless otherwise noted.*

## ESFR-17 & ESFR-25, 1-1/4" NPT Threaded or 2" Grooved Connection, Dry-Type Pendent Early Suppression, Fast Response Sprinkler

*(K=16.8 SIN TY7229, K=25.2 SIN TY9229)*

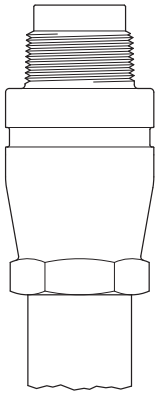

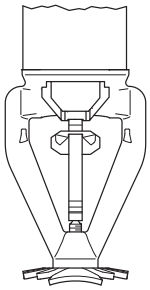

(Note: includes two insulating sealing assemblies)

| C.O. | Pendent | Description | K-Factor | Temperature | Price |
|---|---|---|---|---|---|
| | | **36" Sprinkler** | | | |
| | **61-441-1-360** | *NPT Threads - 36" Brass with Grooved* | *16.8* | *165°F (74°C)* | *See* |
| | **61-442-1-360** | *NPT Threads - 36" Brass with Grooved* | *16.8* | *212°F (100°C)* | *Section 3* |
| | **61-541-1-360** | *NPT Threads - 36" Brass with Grooved* | *25.2* | *165°F (74°C)* | *For* |
| | **61-542-1-360** | *NPT Threads - 36" Brass with Grooved* | *25.2* | *212°F (100°C)* | *Pricing* |
| | | **30" Sprinkler** | | | |
| | **61-441-1-300** | *30" Brass with Grooved/NPT Threads* | *16.8* | *165°F (74°C)* | – |
| | **61-442-1-300** | *30" Brass with Grooved/NPT Threads* | *16.8* | *212°F (100°C)* | – |
| | **61-541-1-300** | *30" Brass with Grooved/NPT Threads* | *25.2* | *165°F (74°C)* | – |
| | **61-542-1-300** | *30" Brass with Grooved/NPT Threads* | *25.2* | *212°F (100°C)* | – |
| | | **23" Sprinkler** | | | |
| | **61-441-1-230** | *23" Brass with Grooved/NPT Threads* | *16.8* | *165°F (74°C)* | – |
| | **61-442-1-230** | *23" Brass with Grooved/NPT Threads* | *16.8* | *212°F (100°C)* | – |
| | **61-541-1-230** | *23" Brass with Grooved/NPT Threads* | *25.2* | *165°F (74°C)* | – |
| | **61-542-1-230** | *23" Brass with Grooved/NPT Threads* | *25.2* | *212°F (100°C)* | – |
| | | **Replacement Parts** | | | |
| | **91-106-1-500** | Replacement Insulating Sealing Assembly | | | $139.24 |
| | | **Sprinkler Wrench** | | | |
| | **56-341-1-001** | W-Type 26 Wrench | | | $322.38 |

**Technical Data Sheet: K=16.8 TFP320, K=25.2 TFP329**



*See latest Technical Data Sheets for specific Approvals, Listings, Design Parameters & available finishes. Sprinkler heads & escutcheons are priced separately unless otherwise noted.*

*Items marked **"C.O."** are made to order and may require longer delivery times. Please contact customer service for availability.*

*Items marked **"C.O."** are made to order and may require longer delivery times. Please contact customer service for availability.*

*See latest Technical Data Sheets for specific Approvals, Listings, Design Parameters & available finishes. Sprinkler heads & escutcheons are priced separately unless otherwise noted.*

## CC3 Combustible Concealed Space Upright Sprinklers, Specific Application, K=4.2, 1/2" N.P.T.

SIN TY2199

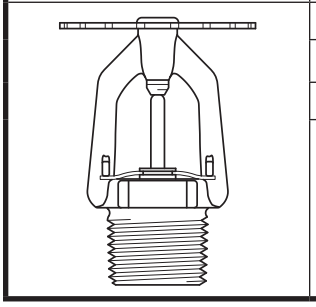

| C.O. | No. | Model | Finish | Temp. | List Price |
|---|---|---|---|---|---|
| | **51-311-1-200** | CC3 | Brass | 200°F (93°C) | $106.59 |
| | | **Sprinkler Wrench** | | | |
| | **56-000-6-387** | W-Type 6 Wrench | | | $252.89 |

**Technical Data Sheet: TFP633**

## CC3 Combustible Concealed Space Upright Sprinklers, Specific Application, K=5.6, 1/2" N.P.T.

SIN TY3199

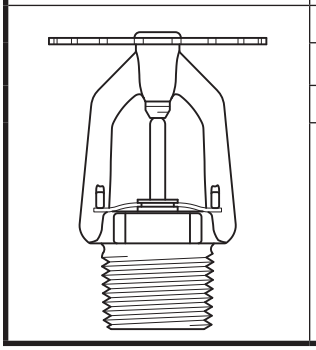

| C.O. | No. | Model | Finish | Temp. | List Price |
|---|---|---|---|---|---|
| | **51-301-1-200** | CC3 | Brass | 200°F (93°C) | $106.59 |
| | | **Sprinkler Wrench** | | | |
| | **56-000-6-387** | W-Type 6 Wrench | | | $252.89 |

**Technical Data Sheet: TFP633**



*See latest Technical Data Sheets for specific Approvals, Listings, Design Parameters & available finishes. Sprinkler heads & escutcheons are priced separately unless otherwise noted.*

*Items marked **"C.O."** are made to order and may require longer delivery times. Please contact customer service for availability.*

Section 1 Standard Spray Sprinklers
Section 2 Extended Coverage Sprinklers
Section 3 Storage Sprinklers
Section 4 Residential Products
Section 5 Dry Sprinklers
Section 6 Special Sprinklers
Section 7 Nozzles and Sprinkler Accessories

## WS Window Sprinklers K=5.6, 1/2" N.P.T.

100 Box Quantity (VSW 20 lbs/box (SIN TY3488), HSW 17 lbs/box (SIN TY3388))

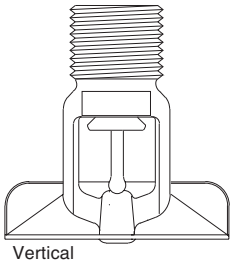


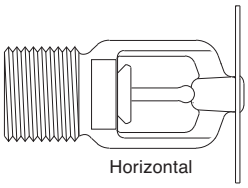


| C.O. | No. | Model | Finish | Temperature | List Price |
|---|---|---|---|---|---|
| | **50-305-1-155** | Horizontal Sidewall | Brass | 155°F (68°C) | $1,016.84 |
| | **50-305-1-200** | Horizontal Sidewall | Brass | 200°F (93°C) | $1,016.84 |
| | **50-305-9-155** | Horizontal Sidewall | Chrome | 155°F (68°C) | $1,016.84 |
| | **50-305-9-200** | Horizontal Sidewall | Chrome | 200°F (93°C) | $1,016.84 |
| | **50-305-4-155** | Horizontal Sidewall | Signal White (RAL 9003) | 155°F (68°C) | $1,016.84 |
| | **50-305-4-200** | Horizontal Sidewall | Signal White (RAL 9003) | 200°F (93°C) | $1,016.84 |
| | **50-305-5-155** | Horizontal Sidewall | Jet Black (RAL 9005) | 155°F (68°C) | $1,059.28 |
| | **50-305-5-200** | Horizontal Sidewall | Jet Black (RAL 9005) | 200°F (93°C) | $1,059.28 |
| | **50-304-1-155** | Vertical Sidewall | Brass | 155°F (68°C) | $1,219.75 |
| | **50-304-1-200** | Vertical Sidewall | Brass | 200°F (93°C) | $1,219.75 |
| | **50-304-9-155** | Vertical Sidewall | Chrome | 155°F (68°C) | $1,219.75 |
| | **50-304-9-200** | Vertical Sidewall | Chrome | 200°F (93°C) | $1,219.75 |
| | **50-304-4-155** | Vertical Sidewall | Signal White (RAL 9003) | 155°F (68°C) | $1,219.75 |
| | **50-304-4-200** | Vertical Sidewall | Signal White (RAL 9003) | 200°F (93°C) | $1,219.75 |
| | **50-304-5-155** | Vertical Sidewall | Jet Black (RAL 9005) | 155°F (68°C) | $1,056.47 |
| | **50-304-5-200** | Vertical Sidewall | Jet Black (RAL 9005) | 200°F (93°C) | $1,056.47 |
| | **Sprinkler Wrench** | | | | |
| | **56-000-1-106** | W-Type 20 Combination Wrench | | | $427.62 |

**Technical Data Sheet: TFP620**

*Items marked **"C.O."** are made to order and may require longer delivery times. Please contact customer service for availability.*

*See latest Technical Data Sheets for specific Approvals, Listings, Design Parameters & available finishes. Sprinkler heads & escutcheons are priced separately unless otherwise noted.*

## Model CWS Specific Application Concealed Pendent Vertical Sidewall Window Sprinkler 5.6 K-factor 1/2" N.P.T.

40 Box Quantity (15 lbs/box) SIN TY3498

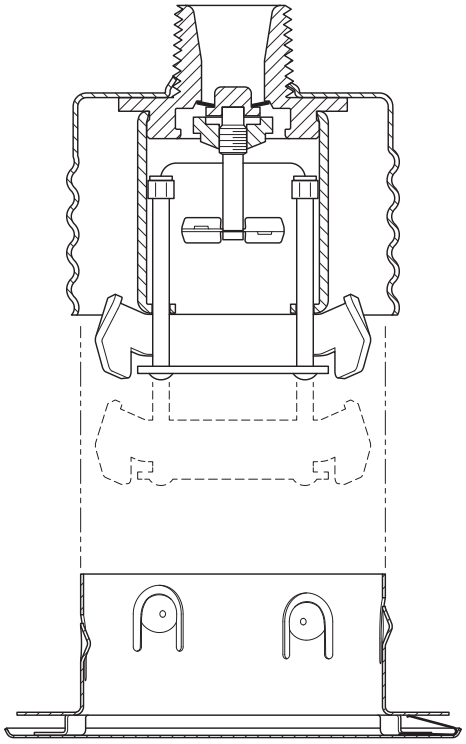

**Note:**
**All "Special Order" cover plates are special ordered and are Non-Returnable. Please see "Terms & Conditions"**

| C.O. | Pendent | Finish | Temperature | List Price |
|---|---|---|---|---|
| ◗ | **50-630-0-160** | Brass | 160°F (71°C) | $1,472.95 |
| ◗ | **50-630-0-212** | Brass | 212°F (100°C) | $1,472.95 |
| | **Cover Plate (For use with 160 F (71°C) Sprinkler)** | | | |
| | **56-214-0-135** | Ivory (RAL1015) | 139°F (59°C) | $61.51 |
| ◗ | **56-214-1-135** | Bright Chrome | 139°F (59°C) | $44.87 |
| ◗ | **56-214-2-135** | Beige (RAL1001) | 139°F (59°C) | $61.51 |
| | **56-214-3-135** | Pure White (RAL9010) | 139°F (59°C) | $61.51 |
| | **56-214-4-135** | Signal White (RAL9003) | 139°F (59°C) | $61.51 |
| | **56-214-5-135** | Grey White (RAL9002) | 139°F (59°C) | $61.51 |
| | **56-214-6-135** | Brown (RAL8028) | 139°F (59°C) | $61.51 |
| | **56-214-7-135** | Black (RAL9005) | 139°F (59°C) | $61.51 |
| | **56-214-8-135** | Brushed Brass | 139°F (59°C) | $153.62 |
| | **56-214-9-135** | Brushed Chrome | 139°F (59°C) | $108.51 |
| ◗ | **56-214-X-135** | Custom Paint | 139°F (59°C) | $61.51 |
| | **Cover Plate (For use with 212°F (100°C) Sprinkler)** | | | |
| | **56-214-0-165** | Ivory (RAL1015) | 165°F (74°C) | $61.51 |
| ◗ | **56-214-1-165** | Bright Chrome | 165°F (74°C) | $44.87 |
| ◗ | **56-214-2-165** | Beige (RAL1001) | 165°F (74°C) | $61.51 |
| | **56-214-3-165** | Pure White (RAL9010) | 165°F (74°C) | $61.51 |
| | **56-214-4-165** | Signal White (RAL9003) | 165°F (74°C) | $61.51 |
| | **56-214-5-165** | Grey White (RAL9002) | 165°F (74°C) | $61.51 |
| | **56-214-6-165** | Brown (RAL8028) | 165°F (74°C) | $61.51 |
| | **56-214-7-165** | Black (RAL9005) | 165°F (74°C) | $61.51 |
| | **56-214-8-165** | Brushed Brass | 165°F (74°C) | $153.62 |
| | **56-214-9-165** | Brushed Chrome | 165°F (74°C) | $108.51 |
| ◗ | **56-214-X-165** | Custom Paint | 165°F (74°C) | $61.51 |
| | **Sprinkler Wrench** | | | |
| | **56-000-1-950** | W-Type 39 Sprinkler Wrench | | $255.14 |
| | **Technical Data Sheet: TFP621** | | | |



*See latest Technical Data Sheets for specific Approvals, Listings, Design Parameters & available finishes. Sprinkler heads & escutcheons are priced separately unless otherwise noted.*

*Items marked **"C.O."** are made to order and may require longer delivery times. Please contact customer service for availability.*

Section 1 Standard Spray Sprinklers
Section 2 Extended Coverage Sprinklers
Section 3 Storage Sprinklers
Section 4 Residential Products
Section 5 Dry Sprinklers
Section 6 Special Sprinklers
Section 7 Nozzles and Sprinkler Accessories

## Series TY-B , K=5.6 & K=8.0 - Stainless Steel and Titanium, - Standard Response Upright, Pendent, and Conventional Sprinklers

P/N 57 — XXX — 0 — XXX — SUFFIX

| | Standard Response |
|---|---|
| 570 | TY-B 5.6K UPRIGHT |
| 571 | TY-B 5.6K PENDENT |
| 573 | TY-B 5.6K CONVENTIONAL |
| 590 | TY-B 8.0K UPRIGHT |
| 591 | TY-B 8.0K PENDENT |
| 593 | TY-B 8.0K CONVENTIONAL |

| | TEMPERATURE RATING |
|---|---|
| 135 | 135°F (57°C) |
| 155 | 155°F (68°C) |
| 175 | 175°F (79°C) |
| 200 | 200°F (93°C) |
| 286 | 286°F (141°C) |
| 360 | 360°F (182°C) |

| | MATERIAL |
|---|---|
| None | Stainless Steel |
| T | Titanium (5.6 K Only) |

Product Symbol Numbers can be developed by using the table show above. Refer to the Technical data sheet for Sprinkler Identification Numbers. All response, orifice sizes, materials and finishes as follows:

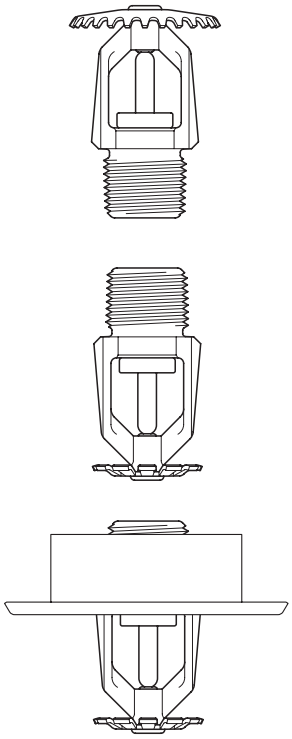

Note: TY-B Standard Response 1/2" NPT K=5.6 Sprinklers is shown

| *Nozzle* | *Description* | *K-Factor* | *List Price* |
|---|---|---|---|
| **57-570-0-XXX** | TY-B Upright, Standard Response | 5.6 | $1,165.90 |
| **57-571-0-XXX** | TY-B Pendent, Standard Response | 5.6 | $705.37 |
| **57-573-0-XXX** | TY-B Conventional, Standard Response | 5.6 | $705.37 |
| **57-XXX-0-XXX T** | Titanium Material - Add "T" Suffix (K=5.6 only) | 5.6 | POA |
| **57-590-0-XXX** | TY-B Upright, Standard Response | 8.0 | $1,165.90 |
| **57-591-0-XXX** | TY-B Pendent, Standard Response | 8.0 | $1,307.60 |
| **57-593-0-XXX** | TY-B Conventional, Standard Response | 8.0 | $1,307.60 |
| | **Recessed Escutcheons (Order Separately)** | | |
| **56-701-0-010** | 1/2" Stainless Steel (Style 10), with Signal White Paint (RAL 9003) | | $44.27 |
| **56-701-1-010** | 1/2" Stainless Steel (Style 10), Unpolished | | $44.27 |
| **56-700-0-010** | 3/4" Stainless Steel (Style 40), with Signal White Paint (RAL 9003) | | $53.12 |
| **56-700-1-010** | 3/4" Stainless Steel (Style 40), Unpolished | | $33.21 |
| | **Sprinkler Wrench** | | |
| **56-000-6-387** | W-Type 6 Wrench | | $252.89 |
| **56-850-4-001** | W-Type 7 Wrench | | $427.09 |

**Note: All Alternate Materials Sprinklers are special ordered and are Non-Returnable. Please see "Terms & Conditions"**

**All Titanium Sprinklers are POA**

**Technical Data Sheet: TFP680**

*Items marked **"C.O."** are made to order and may require longer delivery times. Please contact customer service for availability.*

*See latest Technical Data Sheets for specific Approvals, Listings, Design Parameters & available finishes. Sprinkler heads & escutcheons are priced separately unless otherwise noted.*

## Series TY-B , K=5.6 - Stainless Steel and Titanium, - Standard Response Horizontal Sidewall and Recessed Horizontal Sidewall Sprinklers

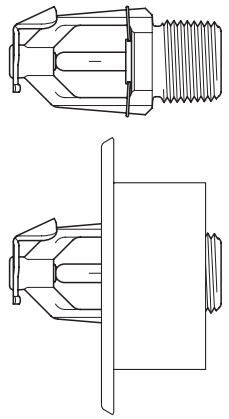

Note: TY-B Standard Response 1/2" NPT K=5.6 Sprinklers is shown

| Nozzle | Description | Temperature | K-Factor | List Price |
|---|---|---|---|---|
| 57-578-0-286 | TY-B Horizontal Sidewall, SR | 286°F (141°C) | 5.6 | $1,146.19 |
| 57-578-0-XXX T | Titanium Material - Add "T" Suffix (K=5.6 only) | | 5.6 | POA |
| | **Recessed Escutcheons (Order Separately)** | | | |
| 56-701-0-010 | 1/2" Stainless Steel (Style 10), with Signal White Paint (RAL 9003) | | | $44.27 |
| 56-701-1-010 | 1/2" Stainless Steel (Style 10) Unpolished | | | $44.27 |
| | **Sprinkler Wrench** | | | |
| 56-000-6-387 | W-Type 6 Wrench | | | $252.89 |
| 56-850-4-001 | W-Type 7 Wrench | | | $427.09 |

**Note: All Alternate Materials Sprinklers are special ordered and are Non-Returnable. Please see "Terms & Conditions"**

**All Titanium Sprinklers are POA**

**Technical Data Sheet: TFP680**

## Series TY-L , K=5.6 & K=8.0 - Stainless Steel - Standard Response, Standard Coverage Pendent and Recessed Pendent Sprinklers

K=5.6 (SIN TY3280), K=8.0 (SIN TY4280)

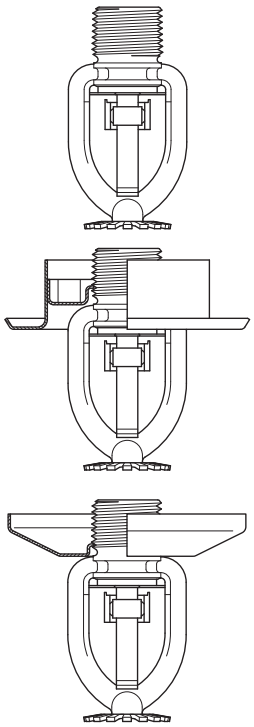

Note: TY-L Standard Response 1/2" NPT K=5.6 Sprinklers are shown

| Nozzle | Description | Temperature | K-Factor | List Price |
|---|---|---|---|---|
| 53-112-0-165 | 1/2" NPT Pendent | 165°F (74°C) | 5.6 | $983.07 |
| 53-112-0-212 | 1/2" NPT Pendent | 212°F (100°C) | 5.6 | $983.07 |
| 53-112-0-280 | 1/2" NPT Pendent | 280°F (138°C) | 5.6 | $983.07 |
| 53-102-0-165 | 3/4" NPT Pendent | 165°F (74°C) | 8.0 | $983.07 |
| 53-102-0-212 | 3/4" NPT Pendent | 212°F (100°C) | 8.0 | $983.07 |
| 53-102-0-280 | 3/4" NPT Pendent | 280°F (138°C) | 8.0 | $983.07 |
| | **Recessed Escutcheons (Order Separately)** | | | |
| 1153 | Model 65 Flat Escutcheons 1/2" - Chrome | | | $4.74 |
| 1152 | Model 65 Flat Escutcheons 3/4" - Chrome | | | $4.74 |
| 1174 | Model 65 Flat Escutcheons 1/2" - White | | | $10.76 |
| 1175 | Model 65 Flat Escutcheons 3/4" - White | | | $10.76 |
| 56-705-0-010 | Recessed Escutcheon (Style 20) Stainless Steel with White Paint | | | $39.51 |
| 56-705-1-010 | Recessed Escutcheon (Style 20) Stainless Steel, Unpolished | | | $36.50 |
| 56-705-0-011 | Recessed Escutcheon (Style 30) Stainless Steel with White Paint | | | $39.51 |
| 56-705-1-011 | Recessed Escutcheon (Style 30) Stainless Steel, Unpolished | | | $36.50 |
| | **Sprinkler Wrench** | | | |
| 56-000-1-849 | Sprinkler Wrench, W-Type 9 Wrench | | | $230.03 |
| 56-000-1-948 | Sprinkler Wrench W-Type 10 Wrench (Recessed Only) | | | $330.58 |

**Note: All Alternate Materials Sprinklers are special ordered and are Non-Returnable. Please see "Terms & Conditions"**

**Technical Data Sheet: TFP683**

Section 1 Standard Spray Sprinklers
Section 2 Extended Coverage Sprinklers
Section 3 Storage Sprinklers
Section 4 Residential Products
Section 5 Dry Sprinklers
Section 6 Special Sprinklers
Section 7 Nozzles and Sprinkler Accessories

## Series TY-FRB , K=5.6 & K=8.0 - Stainless Steel and Titanium, - Quick Response Upright, Pendent, and Conventional Sprinklers

P/N 57 — XXX — 0 — XXX — SUFFIX

| | Quick Response |
|---|---|
| 370 | TY-FRB 5.6K UPRIGHT |
| 371 | TY-FRB 5.6K PENDENT |
| 373 | TY-FRB 5.6K CONVENTIONAL |
| 390 | TY-FRB 8.0K UPRIGHT |
| 391 | TY-FRB 8.0K PENDENT |
| 393 | TY-FRB 8.0K CONVENTIONAL |

| | TEMPERATURE RATING |
|---|---|
| 135 | 135°F (57°C) |
| 155 | 155°F (68°C) |
| 175 | 175°F (79°C) |
| 200 | 200°F (93°C) |
| 286 | 286°F (141°C) |

| | MATERIAL |
|---|---|
| None | Stainless Steel |
| T | Titanium (5.6 K Only) |

Product Symbol Numbers can be developed by using the table show above. Refer to the Technical data sheet for Sprinkler Identification Numbers. All response, orifice sizes, materials and finishes as follows:

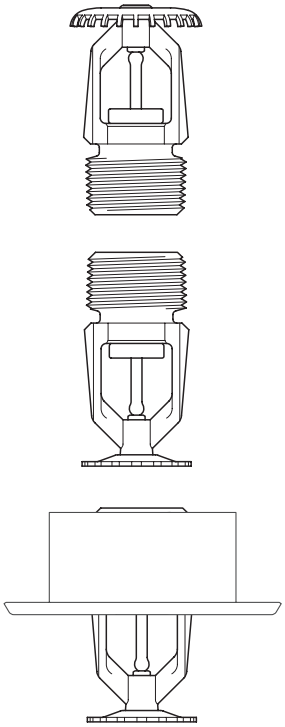

Note: TY-FRB Standard Response 3/4" NPT K=8.0 Sprinklers is shown

| *Nozzle* | *Description* | *K-Factor* | *List Price* |
|---|---|---|---|
| **57-370-0-XXX** | TY-FRB Upright, Quick Response | 5.6 | $979.09 |
| **57-371-0-XXX** | TY-FRB Pendent, Quick Response | 5.6 | $984.71 |
| **57-373-0-XXX** | TY-FRB Conventional, Quick Response | 5.6 | $984.71 |
| **57-XXX-0-XXX T** | Titanium Material - Add "T" Suffix (K=5.6 only) | 5.6 | POA |
| **57-390-0-XXX** | TY-FRB Upright, Quick Response | 8.0 | $1,505.65 |
| **57-391-0-XXX** | TY-FRB Pendent, Quick Response | 8.0 | $1,307.60 |
| **57-393-0-XXX** | TY-FRB Conventional, Quick Response | 8.0 | $1,307.60 |
| **Recessed Escutcheons (Order Separately)** | | | |
| **56-701-0-010** | 1/2" Stainless Steel (Style 10) with Signal White Paint (RAL 9003) | | $44.27 |
| **56-701-1-010** | 1/2" Stainless Steel (Style 10) Unpolished | | $44.27 |
| **56-700-0-010** | 3/4" Stainless Steel (Style 40), with White Paint Finish | | $53.12 |
| **56-700-1-010** | 3/4" Stainless Steel (Style 40) Unpolished | | $33.21 |
| **Sprinkler Wrench** | | | |
| **56-000-6-387** | W-Type 6 Wrench | | $252.89 |
| **56-850-4-001** | W-Type 7 Wrench | | $427.09 |

**Note: All Alternate Materials Sprinklers are special ordered and are Non-Returnable. Please see "Terms & Conditions"**
**All Titanium Sprinklers are POA**

**Technical Data Sheet: TFP680**

*Items marked **"C.O."** are made to order and may require longer delivery times. Please contact customer service for availability.*

*See latest Technical Data Sheets for specific Approvals, Listings, Design Parameters & available finishes. Sprinkler heads & escutcheons are priced separately unless otherwise noted.*

## Series TY-FRB , K=5.6 - Stainless Steel and Titanium, - Quick Response Horizontal Sidewall and Recessed Horizontal Sidewall Sprinklers

Product Symbol Numbers can be developed by using the table show above. Refer to the Technical data sheet for Sprinkler Identification Numbers. All response, orifice sizes, materials and finishes as follows:

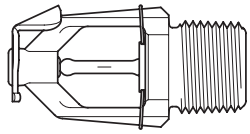

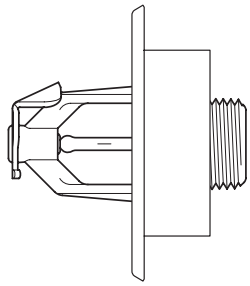

Note: TY-FRB Standard Response 1/2" NPT K=5.6 Sprinklers is shown

| Nozzle | Description | Temperature | K-Factor | List Price |
|---|---|---|---|---|
| **57-378-0-155** | TY-FRB Horizontal Sidewall, QR | 155°F (68°C) | 5.6 | $1,100.23 |
| **57-378-0-286** | TY-FRB Horizontal Sidewall, QR | 286°F (141°C) | 5.6 | $1,100.23 |
| **57-378-0-XXX T** | Titanium Material - Add "T" Suffix (K=5.6 only) | | 5.6 | POA |
| | **Recessed Escutcheons (Order Separately)** | | | |
| **56-701-0-010** | 1/2" Stainless Steel (Style 10), with Signal White Paint (RAL 9003) | | | $44.27 |
| **56-701-1-010** | 1/2" Stainless Steel (Style 10) Unpolished | | | $44.27 |
| | **Sprinkler Wrench** | | | |
| **56-000-6-387** | W-Type 6 Wrench | | | $252.89 |
| **56-850-4-001** | W-Type 7 Wrench | | | $427.09 |

**Note: All Alternate Materials Sprinklers are special ordered and are Non-Returnable. Please see "Terms & Conditions"**

**All Titanium Sprinklers are POA**

**Technical Data Sheet: TFP680**

Section 1 Standard Spray Sprinklers
Section 2 Extended Coverage Sprinklers
Section 3 Storage Sprinklers
Section 4 Residential Products
Section 5 Dry Sprinklers
Section 6 Special Sprinklers
Section 7 Nozzles and Sprinkler Accessories

## Series TY-B & TY-FRB , K=5.6 & K=8.0 - Poly-Stainless, Standard & Quick Response Upright, Pendent, and Horizontal Sidewall Sprinklers

P/N 57 — XXX — X — XXX

| | SR – Standard Response |
|---|---|
| 570 | TY-B 5.6K Upright SR |
| 590 | TY-B 8.0K Upright SR |
| 571 | TY-B 5.6K Pendent SR |
| 591 | TY-B 8.0K Pendent SR |
| 578 | TY-B 5.6K HSW SR |

| | QR – Quick Response |
|---|---|
| 370 | TY-FRB 5.6K Upright QR |
| 390 | TY-FRB 8.0K Upright QR |
| 371 | TY-FRB 5.6K Pendent QR |
| 391 | TY-FRB 8.0K Pendent QR |
| 378 | TY-FRB 5.6K HSW QR |

| | Sprinkler Finish |
|---|---|
| 2 | Grey Aluminium (RAL9007) |

| | Temperature Rating |
|---|---|
| 135 | 135°F (57°C) |
| 155 | 155°F (68°C) |
| 175 | 175°F (79°C) |
| 200 | 200°F (93°C) |
| 286 | 286°F (141°C) |
| 360 | 360°F (182°C)* |

* TY-B - Only

Product Symbol Numbers can be developed by using the table show above. Refer to the Technical data sheet for Sprinkler Identification Numbers. All response, orifice sizes, materials and finishes as follows:

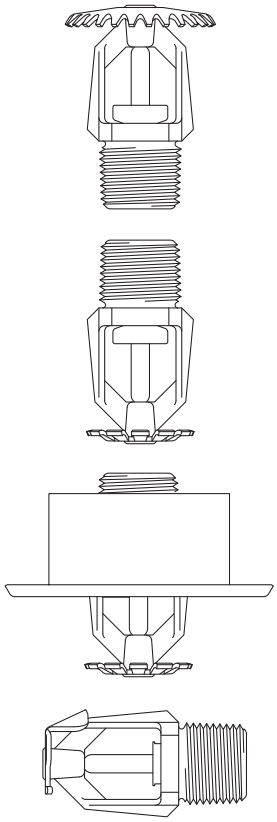

Note: TY-B Standard Response ½" NPT K=5.6 Sprinklers is shown

| Nozzle | Description | NPT | K-Factor | List Price |
|---|---|---|---|---|
| **57-570-2-XXX** | TY-B Upright, Standard Response | ½" | 5.6 | $117.81 |
| **57-571-2-XXX** | TY-B Pendent, Standard Response | ½" | 5.6 | $116.67 |
| **57-370-2-XXX** | TY-FRB Upright, Quick Response | ½" | 5.6 | $167.94 |
| **57-371-2-XXX** | TY-FRB Pendent, Quick Response | ½" | 5.6 | $144.03 |
| **57-590-2-XXX** | TY-B Upright, Standard Response | ¾" | 8.0 | $153.42 |
| **57-591-2-XXX** | TY-B Pendent, Standard Response | ¾" | 8.0 | $156.38 |
| **57-390-2-XXX** | TY-FRB Upright, Quick Response | ¾" | 8.0 | $139.55 |
| **57-391-2-XXX** | TY-FRB Pendent, Quick Response | ¾" | 8.0 | POA |
| **57-578-2-XXX** | TY-B Horizontal Sidewall, Standard Response | ½" | 5.6 | $156.44 |
| **57-378-2-XXX** | TY-FRB Horizontal Sidewall, Quick Response | ½" | 5.6 | $206.35 |
| | **Recessed Escutcheons (Order Separately)** | | | |
| **56-701-7-010** | ½" Grey Aluminum (RAL 9007) (Style 10) | | | $19.80 |
| **56-700-7-010** | ¾" Grey Aluminum (RAL 9007) (Style 40) | | | $19.80 |
| | **Sprinkler Wrench** | | | |
| **56-000-6-387** | W-Type 6 Wrench 2 | | | $252.89 |
| **56-850-4-001** | W-Type 7 Wrench | | | $427.09 |

**Note: All Alternate Materials Sprinklers are special ordered and are Non-Returnable. Please see "Terms & Conditions"**

**Technical Data Sheet: TFP151, TFP161, TFP171, TFP176**

*Items marked **"C.O."** are made to order and may require longer delivery times. Please contact customer service for availability.*

*See latest Technical Data Sheets for specific Approvals, Listings, Design Parameters & available finishes. Sprinkler heads & escutcheons are priced separately unless otherwise noted.*

## Tyco® RAVEN™, K=5.6, I-Series Institutional Pendent and Horizontal Sidewall, Quick Response, Standard and Extended Coverage Sprinklers

Pendent - (Standard Coverage SIN TY3281), (Extended Coverage SIN TY3282)
Horizontal Sidewall - (Standard Coverage SIN TY3381), (Extended Coverage SIN TY3382)

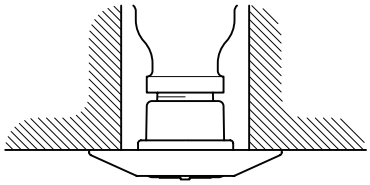

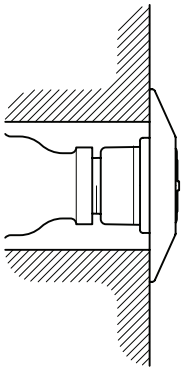

| C.O. | Part Number | Finish | Coverage | Temperature | List Price |
|---|---|---|---|---|---|
| | **Pendent** | | | | |
| | **50-314-9-165** | Grey | Standard | 165°F (74°C) | $257.99 |
| | **50-314-4-165** | White | Standard | 165°F (74°C) | $257.99 |
| | **50-315-9-165** | Grey | Extended | 165°F (74°C) | $270.13 |
| | **50-315-4-165** | White | Extended | 165°F (74°C) | $270.13 |
| | **Horizontal Sidewall** | | | | |
| | **50-316-9-165** | Grey | Standard | 165°F (74°C) | $327.21 |
| | **50-316-4-165** | White | Standard | 165°F (74°C) | $327.21 |
| | **50-317-9-165** | Grey | Extended | 165°F (74°C) | $346.17 |
| | **50-317-4-165** | White | Extended | 165°F (74°C) | $346.17 |
| | **Separately Order Escutcheon, Style F (3" Diameter)** | | | | |
| | **56-314-4-010** | White | Carbon Steel Style F (3" Dia.) | | $76.52 |
| | **56-314-7-010** | Grey | Carbon Steel Style F (3" Dia.) | | $76.52 |
| | **56-314-9-010** | Chrome Coated | Carbon Steel Style F (3" Dia.) | | $76.52 |
| | **56-318-4-010** | White | Stainless Steel Style F (3" Dia.) | | $255.74 |
| | **56-318-7-010** | Grey | Stainless Steel Style F (3" Dia.) | | $255.74 |
| | **56-318-9-010** | Electropolished | Stainless Steel Style F (3" Dia.) | | $255.74 |
| | **Separately Order Escutcheon, Style G (4" Diameter)** | | | | |
| | **56-312-4-010** | White | Carbon Steel Style G (4" Dia.) | | $73.47 |
| | **56-312-7-010** | Grey | Carbon Steel Style G (4" Dia.) | | $73.47 |
| | **56-312-9-010** | Chrome Coated | Carbon Steel Style G (4" Dia.) | | $73.47 |
| | **56-319-4-010** | White | Stainless Steel Style G (4" Dia.) | | $216.35 |
| | **56-319-7-010** | Grey | Stainless Steel Style G (4" Dia.) | | $216.35 |
| | **56-319-9-010** | Electropolished | Stainless Steel Style G (4" Dia.) | | $216.35 |
| | **Accessories** | | | | |
| | **56-000-1-781** | Centering Grommet – Model 1781 | | | $13.15 |
| | **56-000-1-780** | Retaining Flange with Set Screws – Model 1780 | | | $141.86 |
| | **56-000-1-755** | Adjustable Spacer Ring for RAVEN Sprinklers | | | $2.26 |
| | **Sprinkler Wrench** | | | | |
| | **56-314-1-001** | W-Type 25 | | | $740.32 |
| | **Technical Data Sheet: TFP651** | | | | |



*See latest Technical Data Sheets for specific Approvals, Listings, Design Parameters & available finishes. Sprinkler heads & escutcheons are priced separately unless otherwise noted.*

*Items marked **"C.O."** are made to order and may require longer delivery times. Please contact customer service for availability.*

Section 1 Standard Spray Sprinklers
Section 2 Extended Coverage Sprinklers
Section 3 Storage Sprinklers
Section 4 Residential Products
Section 5 Dry Sprinklers
Section 6 Special Sprinklers
Section 7 Nozzles and Sprinkler Accessories

## TFP PH2, K=5.6, Institutional Pendent, Standard Response Sprinkler

50 Box Quantity (33 lbs/box) (SIN TY3290)

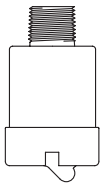

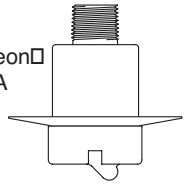

Escutcheon Style A

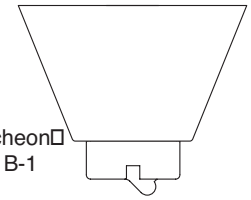

Escutcheon Style B-1

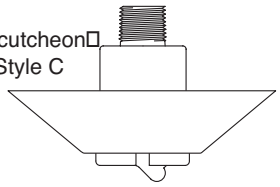

Escutcheon Style C

| C.O. | Pendent | Finish | Temperature | Price |
|---|---|---|---|---|
| ◗ | **51-104-9-165** | Chrome | 165°F (74°C) | $821.91 |
| ◗ | **51-104-9-212** | Chrome | 212°F (100°C) | $821.91 |
| | **Order Escutcheon Separately** | | | |
| | **56-012-7-622** | Type A, Chrome | | $82.60 |
| | **56-001-7-511** | Type B-1, Chrome | | $82.60 |
| | **56-001-7-513** | Type C, Chrome | | $82.60 |
| | **Accessories** | | | |
| | **56-000-1-781** | Centering Grommet – Model 1781 | | $13.15 |
| | **56-000-1-780** | Retaining Flange – Model 1780 | | $141.86 |
| | **56-000-1-752** | Spacers | | $2.26 |
| | **Sprinkler Wrench** | | | |
| | **56-001-5-093** | Model 1509-3 | | $743.67 |

**Technical Data Sheet: TFP650**

*Items marked **"C.O."** are made to order and may require longer delivery times. Please contact customer service for availability.*

*See latest Technical Data Sheets for specific Approvals, Listings, Design Parameters & available finishes. Sprinkler heads & escutcheons are priced separately unless otherwise noted.*

## TFP PH5, K=5.6, Institutional Horizontal Sidewall, Standard Response Sprinkler

50 Box Quantity (33 lbs/box) (SIN TY3390)

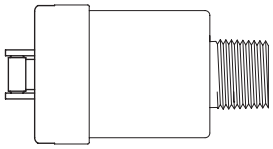

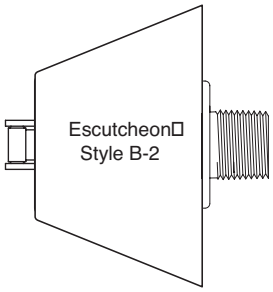


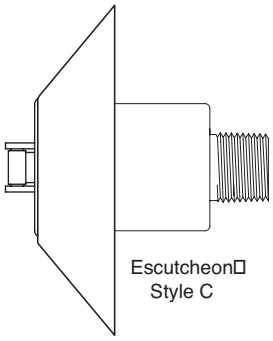


| C.O. | Horizontal Sidewall | Finish | Temperature | Price |
|---|---|---|---|---|
| ◗ | **51-106-9-165** | Chrome | 165°F (74°C) | $877.90 |
| | **Order Escutcheon Separately** | | | |
| | **56-001-7-512** | Type B-2 | | $82.60 |
| | **56-001-7-513** | Type C, Chrome | | $82.60 |
| | **Accessories** | | | |
| | **56-000-1-781** | Centering Grommet – Model 1781 | | $13.15 |
| | **56-000-1-780** | Retaining Flange – Model 1780 | | $141.86 |
| | **56-000-1-752** | Spacers | | $2.26 |
| | **Sprinkler Wrench** | | | |
| | **56-001-5-093** | Model 1509-3 | | $743.67 |

**Technical Data Sheet: TFP654**



*See latest Technical Data Sheets for specific Approvals, Listings, Design Parameters & available finishes. Sprinkler heads & escutcheons are priced separately unless otherwise noted.*

*Items marked **"C.O."** are made to order and may require longer delivery times. Please contact customer service for availability.*

Section 1 Standard Spray Sprinklers
Section 2 Extended Coverage Sprinklers
Section 3 Storage Sprinklers
Section 4 Residential Products
Section 5 Dry Sprinklers
Section 6 Special Sprinklers
Section 7 Nozzles and Sprinkler Accessories

## Issue "D" Quartzoid® Series – High Temperature, K=5.6, 1/2" NPT, Special Sprinklers Issue D

100 Box Quantity (Upright 27.5 lbs/box (SIN TY3191), Pendent 27.5 lbs/box (SIN TY3296))

| C.O. | Upright | Pendent | Finish | Temperature | List Price |
|---|---|---|---|---|---|
| ◗ | **51-036-1-400** | **51-040-1-400** | Brass | 400°F (204°C) | $535.89 |
| ◗ | **51-036-1-500** | **51-040-1-500** | Brass | 500°F (260°C) | $535.89 |
| ◗ | **51-036-1-650** | **51-040-1-650** | Brass | 650°F (343°C) | $1,468.59 |
| ◗ | **51-036-9-400** | **–** | Chrome | 400°F (204°C) | $726.91 |
| ◗ | **–** | **51-040-9-400** | Chrome | 400°F (204°C) | $695.70 |
| ◗ | **51-036-9-500** | **–** | Chrome | 500°F (260°C) | $726.91 |
| ◗ | **–** | **51-040-9-500** | Chrome | 500°F (260°C) | $695.70 |
| ◗ | **51-036-9-650** | **–** | Chrome | 650°F (343°C) | $1,987.46 |
| ◗ | **–** | **51-040-9-650** | Chrome | 650°F (343°C) | $1,974.54 |
| **Sprinkler Wrench** | | | | | |
| | **56-452-1-001** | W-Type 11 Wrench | | | $158.13 |

**Note: All High Temperature Sprinklers are special ordered and are Non-Returnable.**
**Please see "Terms & Conditions"**

**Technical Data Sheet: TFP690**

## Issue "D" Quartzoid® Series – High Temperature, K=8.0, 3/4" NPT, Special Sprinklers Issue D

100 Box Quantity (Upright 27.5 lbs/box (SIN TY4191), Pendent 27.5 lbs/box (SIN TY4291))

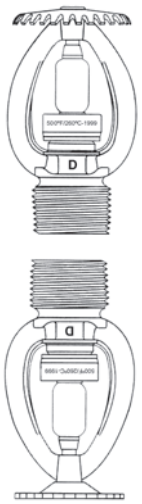

| C.O. | Upright | Pendent | Finish | Temperature | List Price |
|---|---|---|---|---|---|
| ◗ | **51-136-1-400** | **51-140-1-400** | Brass | 400°F (204°C) | $706.20 |
| ◗ | **51-136-1-500** | **51-140-1-500** | Brass | 500°F (260°C) | $706.20 |
| ◗ | **–** | **51-140-9-400** | Chrome | 400°F (204°C) | $715.16 |
| ◗ | **51-136-9-500** | **51-140-9-500** | Chrome | 500°F (260°C) | $715.16 |
| **Sprinkler Wrench** | | | | | |
| | **56-452-1-001** | W-Type 11 Wrench | | | $158.13 |

**Note: All High Temperature Sprinklers are special ordered and are Non-Returnable.**
**Please see "Terms & Conditions"**

**Technical Data Sheet: TFP690**

*Items marked **"C.O."** are made to order and may require longer delivery times.*
*Please contact customer service for availability.*

*See latest Technical Data Sheets for specific Approvals, Listings, Design Parameters & available finishes. Sprinkler heads & escutcheons are priced separately unless otherwise noted.*

## Protectospray Nozzles Model D-3
## Orifice Size #16 to #34 Inclusive with 1/2" NPT Connection, Brass

### Protectospray Nozzles

Protectospray Nozzles are available as open nozzles (D Series) or as a bulb type nozzle (EA-1 Series). Both types are available with deflectors designed to produce discharge patterns having included angles of : 65, 80, 95,110, 125, 140, 160 and 180 degree

**49 – 3XX – X – XXX**

| | ORIFICE |
|---|---|
| 16 | .206" (1/2" NPT) |
| 18 | .250" (1/2" NPT) |
| 21 | .281" (1/2" NPT) |
| 24 | .328" (1/2" NPT) |
| 28 | .375" (1/2" NPT) |
| 32 | .438" (1/2" NPT) |
| 34 | .500" (1/2" NPT) |

| | FINISH & MATERIAL |
|---|---|
| 1 | PLAIN BRONZE |
| 4 | TEFLON COATED BRONZE |
| 9 | CHROME PLATED BRONZE |
| 0 | PLAIN STAINLESS STEEL<br>1/2" NPT only. |

| | ANGLE |
|---|---|
| 065 | 65 |
| 080 | 80 |
| 095 | 95 |
| 110 | 110 |
| 125 | 125 |
| 140 | 140 |
| 160 | 160 |
| 180 | 180 |

Orifice size of "D" Series nozzles is by numerical designations with decimal inch equivalents. Product Symbol Numbers for D Series nozzles can be developed by using the table show above. All discharge spray pattern, orifice sizes, materials and finishes as follows:

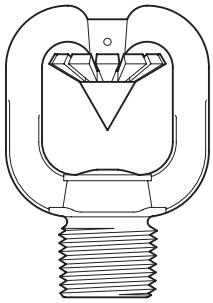

| *Nozzle* | *Finish* | *List Price* |
|---|---|---|
| **49-3XX-1-XXX** | Plain Bronze | $264.76 |
| **49-3XX-4-XXX** | Teflon Coated Bronze* | $843.22 |
| **49-3XX-9-XXX** | Chrome Plated Bronze | $449.48 |
| **49-3XX-0-XXX** | Stainless Steel | $1,490.96 |
| **Sprinkler Wrench** | | |
| **56-452-1-001** | W-Type 11 Wrench | $158.13 |
| **Notes** | | |
| **6012** | *Special Order coating subject to set-up charge. (Net Price) | $630.79 |

**Note: All Protectospray Nozzles are special ordered and are Non-Returnable. Please see "Terms & Conditions"**

**Technical Data Sheet: TFP802**

## Protectospray Nozzles, Model EA-1

**49 – XXX – X – XXX**

| | ORIFICE |
|---|---|
| 9 | 1/2" (1/2" NPT) |
| 8 | 3/8" (1/2" NPT) |
| 7 | 1/4" (1/2" NPT) |

| | ANGLE |
|---|---|
| 65 | 65° |
| 80 | 80° |
| 95 | 95° |
| 10 | 110° |
| 25 | 125° |
| 40 | 140° |
| 60 | 160° |
| 81 | 180° |

| | FINISH & MATERIAL |
|---|---|
| 1 | PLAIN<br>135° thru 500° |
| 9 | CHROME PLATED<br>135° thru 325° |
| 6 | WAX COATED<br>135° & 175° only. |

| | TEMPERATURE | C.O. |
|---|---|---|
| 135 | 135°F | |
| 175 | 175°F | |
| 250 | 250°F | |
| 325 | 325°F | |
| **Plain Finish Only** | | |
| 400 | 400°F | ◗ |
| 500 | 500°F | ◗ |

Product Symbol Numbers for Model EA-1 Protectospray Nozzles can be determined by using the following table.

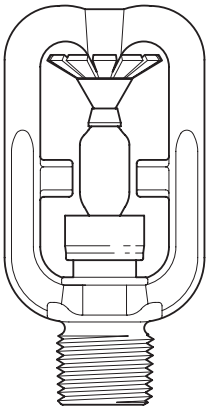

**Note: All Protectospray Nozzles are special ordered and are Non-Returnable. Please see "Terms & Conditions"**

| *Nozzle* | *Finish* | *List Price* |
|---|---|---|
| **1/2" Protectospray Nozzles Model EA-1** | | |
| **49-9XX-1-XXX** | Plain (135° - 325°) | $790.40 |
| **49-9XX-1-400** | **Plain (Only)** | $1,464.61 |
| **49-9XX-1-500** | **Plain (Only)** | $1,470.53 |
| **49-9XX-9-XXX** | Chrome Plated | $1,095.58 |
| **49-9XX-6-XXX** | Wax Coated | $758.80 |
| **1/4" Protectospray Nozzles Model EA-1** | | |
| **49-7XX-1-XXX** | Plain (135° - 325°) | POA |
| **49-7XX-1-400** | **Plain (Only)** | $1,907.42 |
| **49-7XX-1-500** | **Plain (Only)** | $1,907.42 |
| **49-7XX-9-XXX** | Chrome Plated | $1,456.16 |
| **49-7XX-6-XXX** | Wax Coated | $1,248.75 |
| **3/8" Protectospray Nozzles Model EA-1** | | |
| **49-8XX-1-XXX** | Plain (135° - 325°) | $973.67 |
| **49-8XX-1-400** | **Plain (Only)** | $1,807.02 |
| **49-8XX-1-500** | **Plain (Only)** | $1,807.02 |
| **49-8XX-9-XXX** | Chrome Plated | $1,455.13 |
| **49-8XX-6-XXX** | Wax Coated | $1,272.45 |
| **Sprinkler Wrench** | | |
| **56-452-1-001** | W-Type 11 Wrench | $158.13 |
| **Notes** | | |
| ***Temperatures of 400° F & 500° F Available in Plain Finish Only*** | | |
| **6012** | *Special Order coating subject to set-up charge. (Net Price) | $630.79 |
| **Technical Data Sheet: TFP800** | | |

*Items marked **"C.O."** are made to order and may require longer delivery times. Please contact customer service for availability.*

*See latest Technical Data Sheets for specific Approvals, Listings, Design Parameters & available finishes. Sprinkler heads & escutcheons are priced separately unless otherwise noted.*

## Type HV High Velocity Directional Spray Nozzles, Open, Non-Automatic

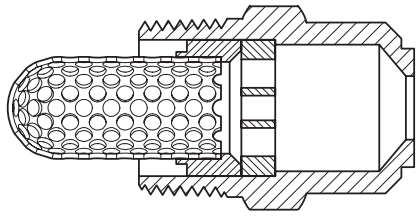

**Note: All High Velocity Spray Nozzles are special ordered and are Non-Returnable.**
**Please see "Terms & Conditions"**

| Nozzle | Description | Finish | List Price |
|---|---|---|---|
| 49-014-1-001 | HV 14 | Brass | $607.46 |
| 49-017-1-001 | HV 17 | Brass | $740.93 |
| 49-026-1-001 | HV 26 | Brass | $740.93 |
| 49-037-1-001 | HV 37 | Brass | $740.93 |
| 49-045-1-001 | HV 45 | Brass | $740.93 |
| 49-060-1-001 | HV 60 | Brass | $740.93 |
| 49-017-0-001 | HV 17 | Stainless Steel | $2,957.12 |
| 49-026-0-001 | HV 26 | Stainless Steel | $2,957.12 |
| 49-037-0-001 | HV 37 | Stainless Steel | $5,914.23 |
| 49-045-0-001 | HV 45 | Stainless Steel | $5,914.23 |
| 49-060-0-001 | HV 60 | Stainless Steel | $5,914.23 |

**Technical Data Sheet: TFP815**

## 3/4" NPT, K=2.90, Open Nozzle for Cooling Towers,Type 1 and Type 2

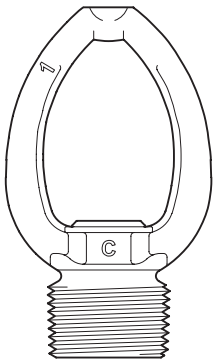

| Nozzle | Type, Finish | List Price |
|---|---|---|
| 50-081-1-000 | Type 1, Bronze | $446.12 |
| 50-081-0-001 | Type 1, Stainless Steel | $510.36 |
| 50-082-1-001 | Type 2, Bronze | $446.12 |
| 50-082-0-001 | Type 2, Stainless Steel | $510.36 |
| **Sprinkler Wrench** | | |
| 56-452-1-001 | W-Type 11 Wrench | $158.13 |

**Technical Data Sheet: TFP830**



*See latest Technical Data Sheets for specific Approvals, Listings, Design Parameters & available finishes. Sprinkler heads & escutcheons are priced separately unless otherwise noted.*

*Items marked **"C.O."** are made to order and may require longer delivery times. Please contact customer service for availability.*

Section 1 Standard Spray Sprinklers
Section 2 Extended Coverage Sprinklers
Section 3 Storage Sprinklers
Section 4 Residential Products
Section 5 Dry Sprinklers
Section 6 Special Sprinklers
Section 7 Nozzles and Sprinkler Accessories

## Model A and Model B, 1/2" and 3/4" NPT , Exposure Nozzles

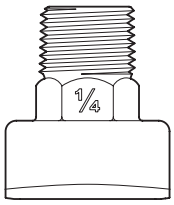


Issue A

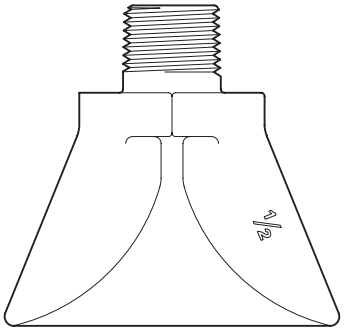


Issue B

**49 – XXX – X – XXX**

| | ISSUE |
|---|---|
| 200 | A |
| 201 | B |

| | FINISH & MATERIAL |
|---|---|
| 1 | Natural Finish Bronze |

| | ORIFICE SIZE |
|---|---|
| 001 | 1/4" |
| 002 | 5/16" |
| 003 | 3/8" |
| 004 | 1/2" |
| 005 | 5/8" |
| 006 | 3/4" |

| *Exposure Sprinkler* | *Orifice, Finish* | *List Price* |
|---|---|---|
| **49-200-1-XXX** | Issue A, Natural Bronze | $510.25 |
| **49-201-1-XXX** | Issue B, Natural Bronze | $685.93 |

**Technical Data Sheet: TFP 835**

*Items marked **"C.O."** are made to order and may require longer delivery times. Please contact customer service for availability.*

*See latest Technical Data Sheets for specific Approvals, Listings, Design Parameters & available finishes. Sprinkler heads & escutcheons are priced separately unless otherwise noted.*

## Model B-1, 1/2" Foam Water Sprinkler, 1/2" Male NPT

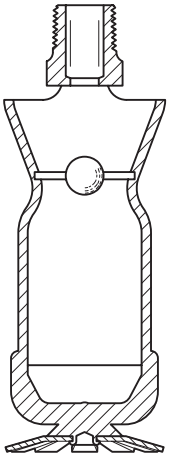

| Nozzle | Orientation | List Price |
|---|---|---|
| 49-211-1-001 | Pendent | $971.63 |

**Technical Data Sheet: TFP 840**

## Type D4a, 1/2" NPT, Protectospray Directional Spray Nozzles, Open, Medium Velocity

**49 – 4XX – X – XXX**

| | ORIFICE |
|---|---|
| 16 | No. 16 |
| 18 | No. 18 |
| 21 | No. 21 |
| 24 | No. 24 |
| 28 | No. 28 |
| 32 | No. 32 |
| 34 | No. 34 |

| | FINISH & MATERIAL |
|---|---|
| 1 | Natural Finish Bronze |
| 4 | Teflon Coated Bronze |

| | SPRAY ANGLE |
|---|---|
| 065 | 65° |
| 080 | 80° |
| 095 | 95° |
| 110 | 110° |
| 125 | 125° |
| 140 | 140° |
| 160 | 160° |
| 180 | 180° |

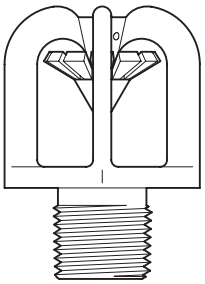

| Nozzle | Finish | List Price |
|---|---|---|
| 49-4XX-1-XXX | Natural Bronze | $1,406.88 |
| 49-4XX-4-XXX | Teflon Coated Bronze * | $2,006.66 |
| **Notes** | | |
| 6012 | *Special Order Teflon coating subject to set-up charge. (Net Price) | $630.79 |

**Note: All Nozzles are special ordered and are Non-Returnable. Please see "Terms & Conditions"**

**Technical Data Sheet: TFP 806**

## Pilot Sprinkler Model FTR-1 Fixed Temperature Release, 1/2" NPT
## For Deluge and Preaction Systems Wet or Dry Pilot Release Service

(SIN TY3030)

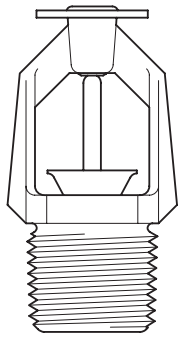

| Nozzle | Finish | Temperature | List Price |
|---|---|---|---|
| 51-041-1-135 | Brass | 135°F (57°C) | $95.63 |
| 51-041-3-135 | Teflon | 135°F (57°C) | $193.73 |
| 51-041-1-155 | Brass | 155°F (68°C) | $95.63 |
| 51-041-4-155 | Signal White (RAL 9003) | 155°F (68°C) | $111.00 |
| 51-041-1-175 | Brass | 175°F (79°C) | $95.63 |
| 51-041-4-175 | Signal White (RAL 9003) | 175°F (79°C) | $111.00 |
| 51-041-3-175 | Teflon | 175°F (79°C) | $193.73 |
| 51-041-1-200 | Brass | 200°F (93°C) | $95.63 |
| 51-041-4-200 | Signal White (RAL 9003) | 200°F (93°C) | $111.00 |
| 51-041-3-200 | Teflon | 200°F (93°C) | $193.73 |
| **Sprinkler Wrench** | | | |
| 56-000-6-387 | W-Type 6 Wrench | | $252.89 |

**Technical Data Sheet: TFP1388**

## Nozzle Accessories
## Blow-Off Caps and Dust Caps for Mulsifyre Projectors and Nozzles

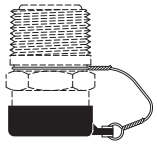

| C.O. | Part No. | Description | List Price |
|---|---|---|---|
| | 56-802-1-001 | Blow-Off Caps for Models F822B through F834B | $114.41 |
| | 56-880-1-001 | Dust Caps for Models F822 through F834 | $71.00 |
| | 56-885-0-001 | Model F885 Dust Cap Assembly, Buna-N | $217.95 |
| | 28247 | Model F885 Dust Cap Assembly, Fluorosilicone | $358.07 |

**Technical Data Sheet: TFP810, F885 Installation Instructions - TFP2299**

## Blow-Off Plugs for Protectospray Nozzles Model D-3

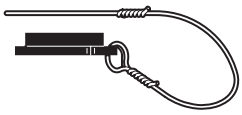

| C.O. | Part Number | Description | List Price |
|---|---|---|---|
| | 56-320-1-001 | Blow Off Plug/Wire D-3 “A” (16) | $85.73 |
| | 56-320-1-004 | Blow Off Plug/Wire D-3 “D” (34) | $85.73 |
| | 56-320-1-005 | Blow Off Plug/Wire D-3 “E” (32) (1/2" for TY-B Sprinklers) | $87.57 |
| | 56-320-1-006 | Blow Off Plug/Wire D-3 “H” (28) | $87.57 |
| | 56-320-1-007 | Blow Off Plug/Wire D-3 “I” (24) | $87.57 |
| | 56-320-1-008 | Blow Off Plug/Wire D-3 “J” (21) | $118.21 |
| | 56-320-1-009 | Blow Off Plug/Wire D-3 “K” (18) | $87.57 |
| | 56-320-1-010 | Blow Off Plug/Wire “N” (17/32") | $87.57 |

**Technical Data Sheet: TFP890**

*Items marked **“C.O.”** are made to order and may require longer delivery times. Please contact customer service for availability.*

*See latest Technical Data Sheets for specific Approvals, Listings, Design Parameters & available finishes. Sprinkler heads & escutcheons are priced separately unless otherwise noted.*

## Miscellaneous Flush Escutcheons

| C.O. | Part Number | Description | List Price |
|---|---|---|---|
| | | **Model 65 Flat Escutcheons** | |
| ◗ | 1150 | 1/2" Flat Escutcheon - Brass | $12.82 |
| ◗ | 1184 | 3/4" Flat Escutcheon - Brass | $12.82 |
| | 1153 | 1/2" Flat Escutcheon - Chrome | $4.74 |
| | 1152 | 3/4" Flat Escutcheon - Chrome | $4.74 |
| | 1174 | 1/2" Flat Escutcheon - White | $10.76 |
| | 1175 | 3/4" Flat Escutcheon - White | $10.76 |

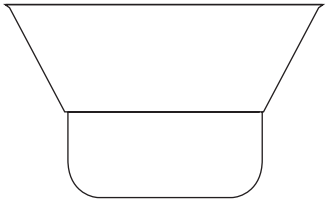

| C.O. | Part Number | Description | List Price |
|---|---|---|---|
| | | **Model 401 2-Piece Adjustable Extended Escutcheons** | |
| | 1192 | 1/2" Cup for 2 pc. Escutcheon - Chrome | $6.17 |
| | 1193 | 3/4" Cup for 2 pc. Escutcheon - Chrome | $6.17 |
| | 1198 | Skirt for 2 pc. Escutcheon - Chrome | $6.17 |
| ◗ | 1194 | 1/2" Cup for 2 pc. Escutcheon - Brass | $7.24 |
| ◗ | 1195 | 3/4" Cup for 2 pc. Escutcheon - Brass | $7.24 |
| ◗ | 1199 | Skirt for 2 pc. Escutcheon - Brass | $7.24 |
| | 1196 | 1/2" Cup for 2 pc. Escutcheon - White | $7.24 |
| | 1197 | 3/4" Cup for 2 pc. Escutcheon - White | $7.24 |
| | 1200 | Skirt for 2 pc. Escutcheon - White | $7.24 |
| | 1203 | 1/2" Cup for 2 pc. Escutcheon - Off White | $7.24 |
| | | **Technical Data Sheet: TFP777** | |



*See latest Technical Data Sheets for specific Approvals, Listings, Design Parameters & available finishes. Sprinkler heads & escutcheons are priced separately unless otherwise noted.*

*Items marked **"C.O."** are made to order and may require longer delivery times. Please contact customer service for availability.*

## Typical Escutcheons

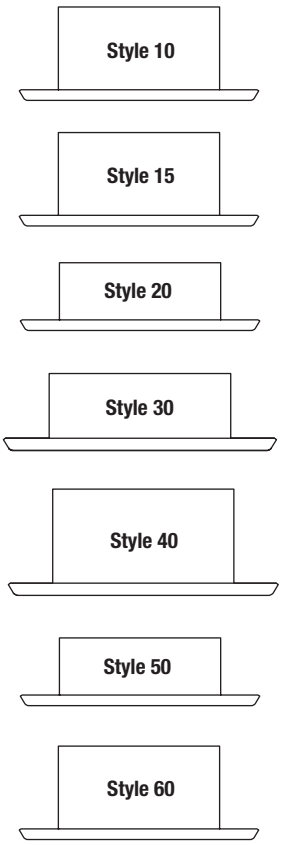


| C.O. | Part Number | Description | List Price |
|---|---|---|---|
| | | **Recessed Escutcheons Style 10, 1/2" NPT (Order Separately)** | |
| ◗ | 56-701-2-010 | 1/2" Brass Plated (Style 10) | $22.65 |
| | 56-701-9-010 | 1/2" Chrome Plated (Style 10) | $7.26 |
| | 56-701-4-010 | 1/2" Signal White (RAL 9003) (Style 10) | $7.26 |
| | 56-701-6-010 | 1/2" Jet Black (RAL 9005) (Style 10) | $19.63 |
| ◗ | 56-701-0-010 | 1/2" Stainless Steel (Style 10) with Signal White Paint (RAL 9003) | $44.27 |
| ◗ | 56-701-1-010 | 1/2" Stainless Steel (Style 10) Unpolished | $44.27 |
| | | **Recessed Escutcheons Style 15, 1/2" NPT (Order Separately)** | |
| ◗ | 56-715-2-010 | 1/2" Brass Plated (Style 15) | $22.65 |
| | 56-715-9-010 | 1/2" Chrome Plated (Style 15) | $5.40 |
| | 56-715-4-010 | 1/2" Signal White (RAL 9003) (Style 15) | $5.40 |
| | 56-715-6-010 | 1/2" Jet Black (RAL 9005) (Style 15) | $19.63 |
| ◗ | 56-715-0-010 | 1/2" Stainless Steel (Style 15) with Signal White Paint (RAL 9003) | $42.76 |
| | | **Recessed Escutcheons Style 20, 1/2" NPT (Order Separately)** | |
| ◗ | 56-705-2-010 | 1/2" Brass Plated (Style 20) | $22.65 |
| | 56-705-9-010 | 1/2" Chrome Plated (Style 20) | $6.30 |
| | 56-705-4-010 | 1/2" Signal White (RAL 9003) (Style 20) | $6.30 |
| | 56-705-6-010 | 1/2" Jet Black (RAL 9005) (Style 20) | $19.63 |
| | 56-705-0-010 | 1/2" Stainless Steel (Style 20) with Signal White Paint (RAL 9003) | $39.51 |
| ◗ | 56-705-1-010 | 1/2" Stainless Steel (Style 20) Unpolished | $36.50 |
| | | **Recessed Escutcheons Style 30, 3/4" NPT (Order Separately)** | |
| ◗ | 56-705-2-011 | 3/4" Brass Plated (Style 30) | $22.65 |
| | 56-705-9-011 | 3/4" Chrome Plated (Style 30) | $9.20 |
| | 56-705-4-011 | 3/4" Signal White (RAL 9003) Recessed (Style 30) | $9.20 |
| | 56-705-6-011 | 3/4" Jet Black (RAL 9005) Recessed (Style 30) | $20.98 |
| ◗ | 56-705-0-011 | 3/4" Stainless Steel (Style 30) with Signal White Paint (RAL 9003) | $39.51 |
| ◗ | 56-705-1-011 | 3/4" Stainless Steel (Style 30) Unpolished | $36.50 |
| | | **Recessed Escutcheons Style 40, 3/4" NPT (Order Separately)** | |
| ◗ | 56-700-2-010 | 3/4" Brass Plated (Style 40) | $22.65 |
| | 56-700-9-010 | 3/4" Chrome Plated (Style 40) | $8.47 |
| | 56-700-4-010 | 3/4" Signal White (RAL 9003) Recessed (Style 40) | $8.47 |
| | 56-700-6-010 | 3/4" Jet Black (RAL 9005) Recessed (Style 40) | $20.98 |
| ◗ | 56-700-0-010 | 3/4" Stainless Steel (Style 40) with Signal White Paint (RAL 9003) | $53.12 |
| ◗ | 56-700-1-010 | 3/4" Stainless Steel (Style 40) Unpolished | $33.21 |
| | | **Recessed Escutcheons Style 50, 1/2" NPT (Order Separately)** | |
| ◗ | 56-711-2-010 | 1/2" Brass Plated (Style 50) | $23.36 |
| | 56-711-9-010 | 1/2" Chrome Plated (Style 50) | $18.74 |
| | 56-711-4-010 | 1/2" Signal White (RAL 9003) Recessed (Style 50) | $18.74 |
| | 56-711-6-010 | 1/2" Jet Black (RAL 9005) Recessed (Style 50) | $21.33 |
| ◗ | 56-711-0-010 | 1/2" Stainless Steel (Style 50) with Signal White Paint (RAL 9003) | $40.12 |
| ◗ | 56-711-1-010 | 1/2" Stainless Steel (Style 50) Unpolished | $35.79 |
| | | **Two-Piece Flush Escutcheons Style 60, 3/4" NPT (Order Separately)** | |
| ◗ | 208107 | 3/4" Brass Plated (Style 60) | $15.24 |
| ◗ | 208102 | 3/4" Chrome Plated (Style 60) | $10.83 |
| ◗ | 208104 | 3/4" White (Style 60) | $10.83 |
| | | **Protective Cover (Order Separately)** | |
| | 56-711-1-084 | Protective Cover (Style 50) | $1.36 |
| | | **Technical Data Sheet: Style 10 thru 50 TFP770, Style 60 TFP778** | |

*Items marked **"C.O."** are made to order and may require longer delivery times. Please contact customer service for availability.*

*See latest Technical Data Sheets for specific Approvals, Listings, Design Parameters & available finishes. Sprinkler heads & escutcheons are priced separately unless otherwise noted.*

## Sprinkler Head Cabinets

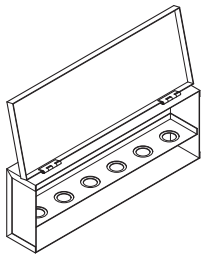

| C.O. | Part Number | Description | List Price |
|---|---|---|---|
| | 1119 | 6 - Head Cabinet | $204.54 |
| | 1124 | 12 - Head Cabinet | $204.54 |
| | 1111 | 6 - ESFR Head Cabinet | $258.95 |
| | 11125 | Ultra K34 Sprinkler Head Cabinet | $452.35 |

**Technical Data Sheet: TFP785**

## G1 and G4 Sprinkler Guards
## G1/S1 and G4/S3 Guards and Shields
### (For Series TY-B, TY-FRB, TY-L and TY-FRL Sprinklers)

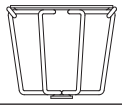
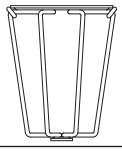
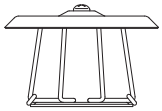
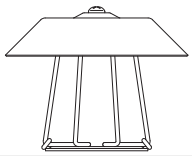

| C.O. | Part Number | Description | List Price |
|---|---|---|---|
| | 56-938-1-001 | G1 Guard, Red | $23.31 |
| | 56-938-0-001 | G1 Guard, Stainless Steel 316 | $46.81 |
| | 56-938-9-001 | G1 Guard, Zinc | $23.31 |
| | 56-937-1-001 | G4 Guard, Red | $30.38 |
| | 56-937-9-001 | G4 Guard, Zinc | $30.38 |
| | 56-938-1-066 | G1/S1 Guard and Shield, Red | $27.34 |
| | 56-938-9-066 | G1/S1 Guard and Shield, Zinc | $27.34 |
| | 56-937-1-066 | G4/S3 Guard and Shield, Red | $31.36 |
| | 56-937-9-066 | G4/S3 Guard and Shield, Zinc | $31.36 |
| | 56-000-8-597 | Guard Installation Tool | $6.30 |

**Technical Data Sheet: TFP780**

## EG-25 Sprinkler Guard
### (For Series ESFR-22 and ESFR-25 Storage Sprinklers)

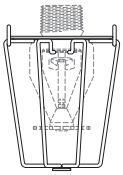

| C.O. | Part Number | Description | List Price |
|---|---|---|---|
| | 56-949-1-025 | EG-25 Red - NPT Threads | $38.43 |
| | 56-949-9-025 | EG-25 Zinc Chromate - NPT Threads | $52.57 |
| | 56-959-1-025 | EG-25 Red – RIS Threads | $28.60 |
| | 56-959-9-025 | EG-25 Zinc Chromate – RIS Threads | $28.60 |
| | 56-000-8-597 | Guard Installation Tool | $6.30 |

**Technical Data Sheet: TFP784**



*See latest Technical Data Sheets for specific Approvals, Listings, Design Parameters & available finishes. Sprinkler heads & escutcheons are priced separately unless otherwise noted.*

*Items marked **"C.O."** are made to order and may require longer delivery times. Please contact customer service for availability.*

## G5 Sprinkler Guard
### (For Series DS-1 Dry Sprinklers)

| | C.O. | Part Number | Description | List Price |
|---|---|---|---|---|
| 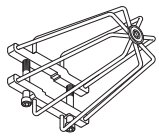 | | 56-938-9-000 | G5 Sprinkler Guard for Series DS 1 Sprinklers | $58.88 |

## G2 Guard, WS-2 Shield and WSG-2 Guard & Shield for ELO-231 Series

| | C.O. | Part Number | Description | List Price |
|---|---|---|---|---|
| | | 56-000-1-087 | G-2 Guard, Red | $19.41 |
| | | 56-000-1-086 | G-2 Guard, Zinc | $19.41 |
| 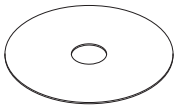 | | 56-000-1-081 | WS-2 Shield (1/2), Red | $22.40 |
| | | 56-000-1-080 | WS-2 Shield (1/2), Zinc | $22.40 |
| | | 56-000-1-083 | WS-2 Shield (3/4), Red | $22.40 |
| | | 56-000-1-082 | WS-2 Shield (3/4), Zinc | $22.40 |
| | | 56-000-1-098 | WSG-2 Guard & Shield , Red | $31.77 |
| | | 56-000-1-097 | WSG-2 Guard & Shield , Zinc | $31.77 |

**Technical Data Sheet: TFP780**

## Wide Adapter Plates
*Trim plates for use with any standard escutcheon or cover plate.*

| | C.O. | Part Number | Description | List Price |
|---|---|---|---|---|
| 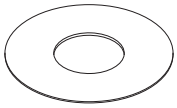 | | 10033601 | Adapter Plate (4 3/4"), Signal White (RAL 9003) | $9.11 |
| | | 10033602 | Adapter Plate (4 3/4"), Chrome | $9.11 |

*Items marked **"C.O."** are made to order and may require longer delivery times. Please contact customer service for availability.*

*See latest Technical Data Sheets for specific Approvals, Listings, Design Parameters & available finishes. Sprinkler heads & escutcheons are priced separately unless otherwise noted.*

## ES-1 and ES-2 Shield for Tyco Pendent Sprinklers

| | C.O. | Part Number | Description | List Price |
|---|---|---|---|---|
| 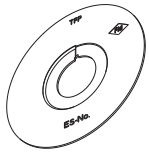 | | 58-000-1-002 | ES-1 Shield (3/4"), Zinc Coated | $10.17 |
| | | 58-000-1-003 | ES-1 Shield (3/4"), Red Paint | $10.17 |
| 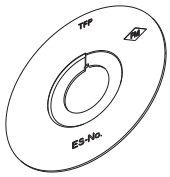 | | 58-000-1-005 | ES-2 Shield (1"), Zinc Coated | $10.17 |
| | | 58-000-1-006 | ES-2 Shield (1"), Red Paint | $10.17 |

## Special Services

| Clean Room Seal / Air, Dust Seal | | |
|---|---|---|
| Description | Part Number | List Price |
| RFII Air and Dust Seal | 56-908-1-001 | $29.93 |
| **Protective Caps and Cover plate Tool for LFII and RFII Concealed Sprinklers** | | |
| Cover Plate Tool to Install or Remove Cover Plates. Used for Concealed Sprinklers | 56-000-1-300 | $268.31 |

**All Special Finishes and Coatings are special ordered and are Non-Returnable.**
**Please see "Terms & Conditions"**



*See latest Technical Data Sheets for specific Approvals, Listings, Design Parameters & available finishes. Sprinkler heads & escutcheons are priced separately unless otherwise noted.*

*Items marked **"C.O."** are made to order and may require longer delivery times. Please contact customer service for availability.*

Section 1 Standard Spray Sprinklers
Section 2 Extended Coverage Sprinklers
Section 3 Storage Sprinklers
Section 4 Residential Products
Section 5 Dry Sprinklers
Section 6 Special Sprinklers
Section 7 Nozzles and Sprinkler Accessories

## Sprinkler Wrench List

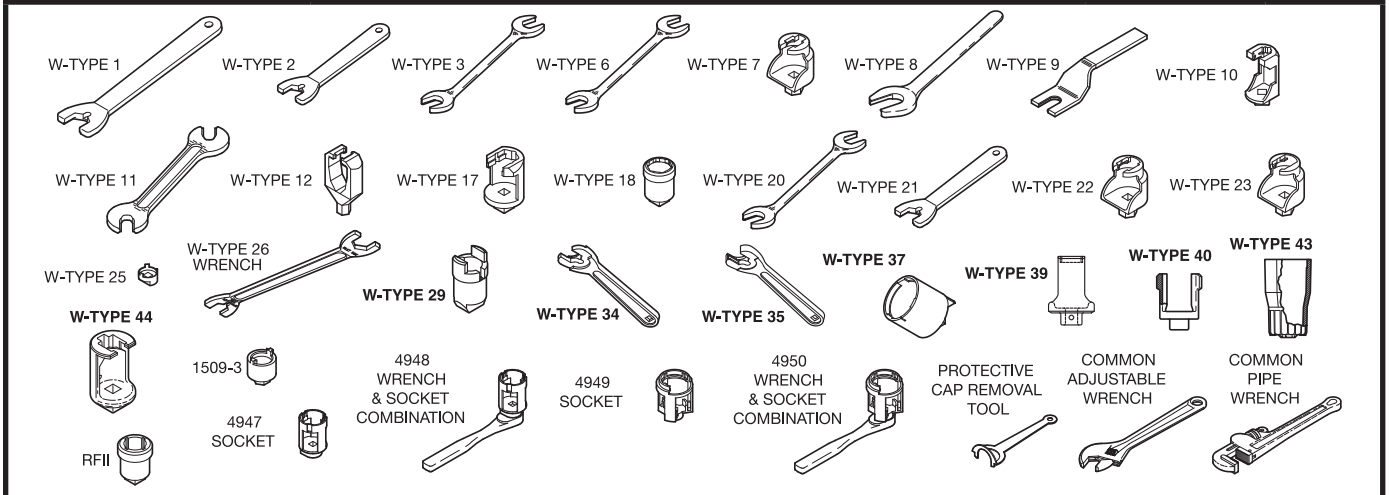


| *Wrench Type* | *Wrench used with the following Sprinkler Models:* | *Part No.* | *List Price* |
|---|---|---|---|
| W-Type 1 | EC-25, ESFR-25, ESFR-22 | **56-872-1-025** | $319.17 |
| W-Type 2 | ESFR Pendent | **56-872-1-001** | $252.89 |
| W-Type 3 | BB1 17/32, EPEC, EC-8, EC-11, EC-14, EC-17, ELO SW-20, ELO SW-24, ELO-231, ELO-231 B, ELO-231 FRB, LD | **56-895-1-001** | $349.96 |
| W-Type 6 | CC2, EC-5, LFII, TY-B, TY-FRB | **56-000-6-387** | $252.89 |
| W-Type 7 | CHEC, DS-1, EC-5, LFII, TY-B, TY-FRB, TY-FRFS, TY-FS, TY-FS Special | **56-850-4-001** | $427.09 |
| W-Type 8 | DS-3, K17-231, Ultra K17 | **56-892-1-001** | $424.81 |
| W-Type 9 | TY-FRL, TY-L | **56-000-1-849** | $230.03 |
| W-Type 10 | TY-FRFS, TY-FS, TY-FS Special, TY-L | **56-000-1-948** | $330.58 |
| W-Type 11 | Issue D Quartzoid, Type EA-1, D3, D3S, Type 1 & 2 | **56-452-1-001** | $158.13 |
| W-Type 12 | TY-FRL | **56-798-1-001** | $330.60 |
| W-Type 17 | DS-2 | **56-010-4-118** | $365.78 |
| W-Type 18 | ELOC, LFII | **56-000-1-265** | $429.45 |
| W-Type 20 | CC1, HIP, WS | **56-000-1-106** | $427.62 |
| W-Type 21 | ESFR-17 Upright TY7126 | **56-001-0-686** | $252.89 |
| W-Type 22 | EC-11, EC-14 | **56-665-7-001** | $429.59 |
| W-Type 23 | EC-8 | **56-000-6-838** | $428.44 |
| W-Type 25 | Tyco Raven Institutional | **56-314-1-001** | $740.32 |
| W-Type 26 | ESFR-17 Dry TY7229 & ESFR-25 DRY TY9229 | **56-341-1-001** | $322.38 |
| W-Type 29 | Type IFP AQUAMIST | **28241** | $262.22 |
| W-Type 34 | ESFR-14 | **56-462-1-001** | $409.50 |
| W-Type 35 | ESFR-17 Pendant TY7223 & TY7236 | **56-463-1-001** | $428.52 |
| W-Type 37 | LFII, RFII Concealed Horizontal Sidewall | **56-320-1-015** | $444.94 |
| W-Type 39 | CWS | **56-000-1-950** | $255.14 |
| W-Type 43 | LFII Lead-Free Concealed Pendent | **56-000-1-078** | $180.14 |
| W-Type 44 | LFII Concealed Pendent 5.8K | **56-000-1-077** | $204.53 |
| RFII | DS-C, DS-ECC, RFII | **56-000-1-075** | $427.45 |
| 1509-3 | TFP MAX, TFP PH2, TFP PH5 | **56-001-5-093** | $743.67 |
| Protective Cap Removal Tool | LFII | **56-000-4-300** | $150.53 |
| Pipe Wrench | DS-1, DS-2, DS-C, DS-ECC | N/A | - |
| Adjustable Wrench | BB1-BB3, SD1 - SD3, D4a, F822-F834, HV-14 - HV-60, Issue A & B, B-1 | N/A | - |

*Items marked **"C.O."** are made to order and may require longer delivery times. Please contact customer service for availability.*

*See latest Technical Data Sheets for specific Approvals, Listings, Design Parameters & available finishes. Sprinkler heads & escutcheons are priced separately unless otherwise noted.*

## Model AV-1-300 Alarm Check Valve, 300 psi 2½" thru 8"

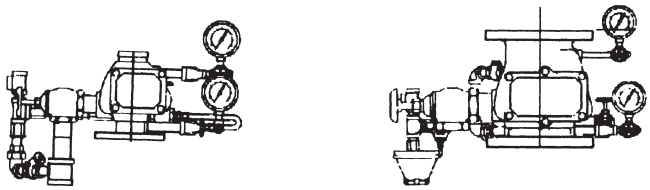

| Description | Part No. | List Price |
|---|---|---|
| 2½" Model AV-1-300, Groove x Groove, Vertical | **52-203-1-110** | $3,963.05 |
| 4" Model AV-1-300, Groove x Groove, Vertical/Horizontal | **52-203-1-113** | $3,963.05 |
| 6" Model AV-1-300, Groove x Groove, Vertical/Horizontal | **52-203-1-115** | $4,726.77 |
| 8" Model AV-1-300, Groove x Groove, Vertical/Horizontal | **52-203-1-916** | $7,122.68 |
| 2½" Model AV-1-300, Flange x Groove, Vertical | **52-203-1-210** | $3,962.41 |
| 4" Model AV-1-300, Flange x Groove, Vertical/Horizontal | **52-203-1-413** | $3,962.41 |
| 6" Model AV-1-300, Flange x Groove, Vertical/Horizontal | **52-203-1-615** | $4,726.02 |
| 8" Model AV-1-300, Flange x Groove, Vertical/Horizontal | **52-203-1-816** | $7,121.54 |
| 4" Model AV-1-300, Flange x Flange, Vertical/Horizontal | **52-203-1-013** | $3,963.05 |
| 6" Model AV-1-300, Flange x Flange, Vertical/Horizontal | **52-203-1-015** | $4,726.77 |
| 8" Model AV-1-300, Flange x Flange, Vertical/Horizontal | **52-203-1-016** | $7,122.68 |
| **Pre-assembled Alarm Check Valves** | | |
| **Groove x Groove - Closed** | | |
| 2½" Model AV-1 GXG Vertical Closed, Pre-Trimmed | **52-203-2-110** | $4,825.61 |
| 4" Model AV-1 GXG Vertical Closed, Pre-Trimmed | **52-203-2-113** | $6,845.08 |
| 6" Model AV-1 GXG Vertical Closed, Pre-Trimmed | **52-203-2-115** | $11,710.67 |
| 8" Model AV-1 GXG Vertical Closed, Pre-Trimmed | **52-203-2-916** | $4,432.29 |
| **Groove x Groove - Open** | | |
| 4" Model AV-1 GXG Vertical Open, Pre-Trimmed | **52-203-3-113** | $6,845.08 |
| 6" Model AV-1 GXG Vertical Open, Pre-Trimmed | **52-203-3-115** | $11,710.67 |
| 8" Model AV-1 GXG Vertical Open, Pre-Trimmed | **52-203-3-916** | $4,432.29 |
| **Flange x Groove - Closed** | | |
| 6" Model AV-1 FXG Vertical Closed, Pre-Trimmed | **52-203-2-625** | $11,633.68 |
| 8" Model AV-1 FXG Vertical Closed, Pre-Trimmed | **52-203-2-816** | $14,134.96 |
| **Flange x Groove - Open** | | |
| 4" Model AV-1 FXG Vertical Open, Pre-Trimmed | **52-203-2-414** | $6,845.08 |
| 6" Model AV-1 FXG Vertical Open, Pre-Trimmed | **52-203-2-615** | $11,633.68 |
| **Flange x Flange - Closed** | | |
| 4" Model AV-1 FXF Vertical Closed, Pre-Trimmed | **52-203-2-013** | $6,845.08 |
| 6" Model AV-1 FXF Vertical Closed, Pre-Trimmed | **52-203-2-015** | $11,633.68 |
| 8" Model AV-1 FXF Vertical Closed, Pre-Trimmed | **52-203-2-016** | $14,134.96 |

(Trim Assemblies and Replacement Parts are on the next page)



*See latest Technical Data Sheets for specific Approvals, Listings, Design Parameters & available finishes on www.tyco-fire.com.*

## Model AV-1-300 Alarm Check Valve, 300 psi 2 1/2" thru 8"

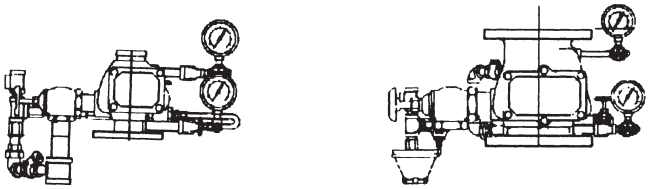

| Trim Assemblies for 2 1/2", 4", 6" & 8" Alarm Check Valves Model AV-1-300 | | |
|---|---|---|
| 2 1/2" Vertical Closed Drain, Basic Trim (Galvanized) AV-1-300 | **52-204-4-950** | $2,623.56 |
| 4" & 6" Vertical Closed Drain, Basic Trim (Galvanized) AV-1-300 | **52-204-4-951** | $2,964.21 |
| 4" & 6" Vertical Open Drain, Basic Trim (Galvanized) AV-1-300 | **52-204-4-954** | $3,414.63 |
| 4" & 6" Horizontal Closed Drain, Basic Trim (Galvanized) AV-1-300 | **52-204-4-057** | $4,071.34 |
| 8" Vertical Closed Drain, Basic Trim (Galvanized) AV-1-300 | **52-204-4-952** | $3,305.34 |
| 8" Vertical Open Drain, Basic Trim (Galvanized) AV-1-300 | **52-204-4-955** | $3,358.90 |
| 8" Horizontal Closed Drain, Basic Trim (Galvanized) AV-1-300 | **52-204-4-058** | $3,991.03 |
| Pressure Relief Trim, 175 PSI | **52-201-2-047** | $836.80 |
| Pressure Relief Trim, 185 PSI | **52-201-2-048** | $836.80 |
| Trim, Alarm Vent | **52-201-2-012** | $277.65 |
| RC-1 Retard Chamber with Trim | **52-211-1-002** | $1,412.40 |
| Drip Funnel Support Bracket | **92-211-1-003** | $37.53 |
| Drip Funnel 1-1/4" Drain Cup | **92-343-1-007** | $47.86 |
| **Notes** | | |
| Other Options per TFP910; Pressure switch must be ordered separately, if required. | | |
| **Replacement Parts for 2 1/2" Model AV-1-300 Alarm Check Valves** | | |
| **Repair Parts Kit**<br>Includes: 1-Handhole Cover Gasket & 1-Clapper Facing | **92-200-1-216** | $484.17 |
| **Clapper Assembly Kit**<br>Includes: 1-Clapper, 1-Clapper Facing, 1-Clapper Washer, 1-Clapper Lock Nut, 1-Clapper Hinge Pin, 2-Clapper Hinge Pin Bushings & 1-Clapper Spring | **92-200-1-218** | $1,707.01 |
| **Replacement Parts for 4" Model AV-1-300 Alarm Check Valves** | | |
| **Repair Parts Kit**<br>Includes: 1-Handhole Cover Gasket & 1-Clapper Facing | **92-200-1-416** | $560.44 |
| **Clapper Assembly Kit**<br>Includes: 1-Clapper, 1-Clapper Facing, 1-Clapper Washer, 1-Hex Self-Locking Cap Screw, 1-Clapper Hinge Pin Bushing & 1-Clapper Spring | **92-200-1-423** | $2,595.48 |
| **Replacement Parts for 6" Model AV-1-300 Alarm Check Valves** | | |
| **Repair Parts Kit**<br>Includes: 1-Handhole Cover Gasket & 1-Clapper Facing | **92-200-1-620** | $631.69 |
| **Clapper Assembly Kit**<br>Includes: 1-Clapper, 1-Clapper Facing, 1-Clapper Washer, 1-Hex Self-Locking Cap Screw, 1-Clapper Hinge Pin Bushing & 1-Clapper Spring | **92-200-1-623** | $3,165.71 |
| **Replacement Parts for 8" Model AV-1-300 Alarm Check Valves** | | |
| **Repair Parts Kit**<br>Includes: 1-Handhole Cover Gasket & 1-Clapper Facing | **92-200-1-816** | $896.15 |
| **Clapper Assembly Kit**<br>Includes: 1-Clapper, 1-Clapper Facing, 1-Clapper Washer, 1-Hex Self-Locking Cap Screw, 1-Clapper Hinge Pin Bushing & 1-Clapper Spring | **92-200-1-823** | $5,073.83 |
| **Technical Data Sheet - TFP910** | | |

*See latest Technical Data Sheets for specific Approvals, Listings, Design Parameters & available finishes on www.tyco-fire.com.*

## Shotgun CV-1FR Riser Check Valve

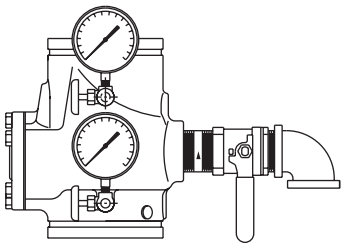

| Part Numbers | Description | List Price |
|---|---|---|
| **59-590-1-020** | 2" Shotgun Riser Check Valve | $1,572.84 |
| **59-590-1-025** | 2 1/2" Shotgun Riser Check Valve | $1,534.06 |
| **59-590-1-030** | 3" Shotgun Riser Check Valve | $1,535.91 |
| **59-590-1-040** | 4" Shotgun Riser Check Valve | $1,535.91 |
| **59-590-1-050** | 5" Shotgun Riser Check Valve | $2,853.81 |
| **59-590-1-060** | 6" Shotgun Riser Check Valve | $2,070.15 |
| **59-590-1-080** | 8" Shotgun Riser Check Valve | $2,101.26 |
| **59-590-1-100** | 10" Shotgun Riser Check Valve | $6,749.08 |
| **59-590-1-120** | 12" Shotgun Riser Check Valve | $4,877.56 |
| | **Trim Assemblies for 2" thru 12" CV-1FR Riser Check Valve** | |
| **59-591-1-020** | 2" Shotgun Check Trim (w/ gauges) | $1,022.93 |
| **59-591-1-030** | 2 1/2" - 3" Shotgun Check Trim (w/ gauges) | $1,022.93 |
| **59-591-1-080** | 4" - 12" Shotgun Check Trim (w/ gauges) | $1,022.93 |

**Technical Data Sheet: TFP950**

## RSV-1 Residential Shutoff Valves

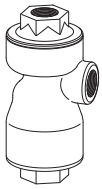

1" RSV-1

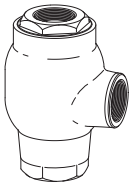

2" RSV-1

| Description | Part No. | List Price |
|---|---|---|
| 1" Model RSV-1 - Stainless Steel | **52-540-1-011** | $3,373.78 |
| 2" Model RSV-1 - Stainless Steel | **52-540-1-012** | $5,594.53 |

**Technical Data Sheet - TFP980 - Brass, TFP982 - Stainless Steel**

## Model RC-1 Retard Chamber

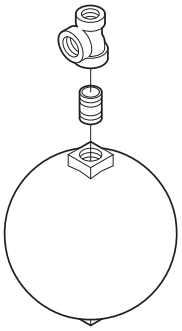

| Part No. | Description | List Price |
|---|---|---|
| **52-211-1-002** | Retard Chamber, Model RC-1 w/trim | $1,412.40 |
| | **Replacement Parts for Model RC-1 Retard Chamber** | |
| **92-210-2-005** | Restriction Assembly | $1,501.56 |

**Technical Data Sheet - TFP920**



*See latest Technical Data Sheets for specific Approvals, Listings, Design Parameters & available finishes on www.tyco-fire.com.*

## Resi-Risers

| Description | Part No. | List Price |
|---|---|---|
| **Resi-Risers w/Retard Feature on Flow Switch and Without Pressure Relief Valve** | | |
| 1" Resi-Riser | **54-360-1-011** | $3,749.28 |
| 1 1/4" Resi-Riser | **54-360-1-012** | $3,244.80 |
| **Resi-Risers w/Pressure Relief Valve and Retard Feature** | | |
| 1" Resi-Riser | **54-360-1-111** | $3,038.55 |
| 1 1/4" Resi-Riser | **54-360-1-112** | $3,338.76 |
| 2" Resi-Riser | **54-360-1-114** | $4,029.60 |

## RM-2 Riser Manifolds - Commercial

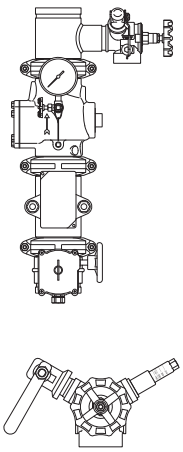

| Size | Description | Type | Part No. | List Price |
|---|---|---|---|---|
| 2" | Commercial | Groove x Groove | **5940601** | $3,813.47 |
| 2-1/2" | Commercial | Groove x Groove | **5940611** | $3,894.27 |
| 3" | Commercial | Groove x Groove | **5940621** | $3,955.77 |
| 4" | Commercial | Groove x Groove | **5940651** | $4,992.34 |
| 6" | Commercial | Groove x Groove | **5940661** | $5,752.59 |
| **Accessories** | | | | |
| 2" - 3" | Test and Drain Valve Alternate Kit 2", 2-½" and 3" | | **59352691** | $97.33 |
| 4" - 6" | Test and Drain Valve Alternate Kit 4" and 6" | | **59352692** | $172.04 |
| 2" - 3" | Flex Hose for 2", 2-½" and 3", Length 24" | | **5940124** | $397.13 |
| 2" - 3" | Flex Hose for 2", 2-½" and 3", Length 36" | | **5940136** | $544.15 |
| 4" - 6" | Flex Hose for 4" and 6", Length 24" | | **5940224** | $544.15 |
| 4" - 6" | Flex Hose for 4" and 6", Length 36" | | **5940236** | $745.17 |
| **Replacement Parts** | | | | |
| 2" - 3" | TD-2 Test and Drain 1¼" (for RM-2 - 2", 2-½" and 3") | | **598321** | $3,941.56 |
| 4" - 6" | TD-2 Test and Drain 2" (for RM-2 - 4" - 6") | | **598322** | $3,496.34 |
| 1-1/4" | TD-2 Replacement Handwheel 1-1/4" NPT | | **5940100** | $48.18 |
| 2" | TD-2 Replacement Handwheel 2" NPT | | **5940101** | $26.39 |

**Technical Data Sheet: TFP964 for RM-2 and TFP965 for TD-2**

*See latest Technical Data Sheets for specific Approvals, Listings, Design Parameters & available finishes on www.tyco-fire.com.*

## RM-2 Base Riser Manifolds - Residential without Test & Drain Valve

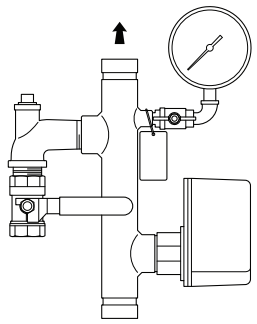

| Size | Description | Type | Part No. | List Price |
|---|---|---|---|---|
| 1" | Residential | Male Thread x Male Thread | **6940671** | $2,110.22 |
| 1¼" | Residential | Female Thread x Female Thread | **6940471** | $2,451.24 |
| 1¼" | Residential | Groove x Groove | **6940481** | $2,451.24 |
| 1½" | Residential | Female Thread x Female Thread | **6940571** | $2,243.65 |
| 1½" | Residential | Groove x Groove | **6940581** | $2,427.92 |
| 2" | Residential | Groove x Groove | **6940591** | $2,081.95 |
| **Replacement Parts** | | | | |
| 1" - 2" | Pressure Relief Kit | | **5940711** | $727.13 |

**Technical Data Sheet - TFP966 for RM-2 Base Residential**

## RM-2 Base Riser Manifolds - Residential with Test & Drain Valve

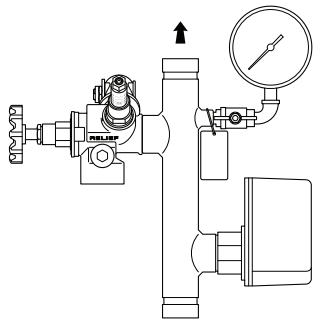

| Size | Description | Type | Part No. | List Price |
|---|---|---|---|---|
| 1¼" | Residential | Female Thread x Female Thread | **6940472** | $3,127.96 |
| 1¼" | Residential | Groove x Groove | **6940482** | $3,190.96 |
| 1½" | Residential | Groove x Groove | **6940582** | $2,557.19 |
| **Replacement Parts** | | | | |
| 1" - 2" | TD-2 Test and Drain 1¼" (for RM-2 1" - 3") | | **598321** | $3,941.56 |

**Technical Data Sheet - TFP966 for RM-2 Base Residential and TFP965 for TD-2**

## RM-2 Base Riser Manifolds - Commercial

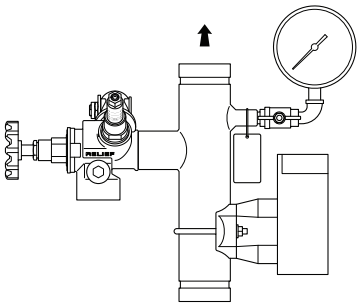

| Size | Description | Type | Part No. | List Price |
|---|---|---|---|---|
| 2" | Commercial | Groove x Groove | **6940601** | $2,404.24 |
| 2-½" | Commercial | Groove x Groove | **6940611** | $2,427.19 |
| 3" | Commercial | Groove x Groove | **6940621** | $2,949.32 |
| 4" | Commercial | Groove x Groove | **6940651** | $3,455.93 |
| 6" | Commercial | Groove x Groove | **6940661** | $3,781.18 |
| 8" | Commercial | Groove x Groove | **6940681** | $4,849.58 |
| **Replacement Parts** | | | | |
| 2" - 3" | TD-2 Test and Drain 1¼" (for RM-2 Base 2", 2½" and 3") | | **598321** | $3,941.56 |
| 4" - 6" | TD-2 Test and Drain 2" (for RM-2 Base 4" - 8") | | **598322** | $3,496.34 |

**Technical Data Sheet - TFP966 for RM-2 Base Residential and TFP965 for TD-2**



*See latest Technical Data Sheets for specific Approvals, Listings, Design Parameters & available finishes on www.tyco-fire.com.*

Section 8 Wet System Valves
Section 9 Water Motor Alarms
Section 10 Dry Pipe Valves
Section 11 Quick Opening Devices
Section 12 Air Maintenance Devices
Section 13 Deluge Valves & Accessories
Section 14 Preaction Systems
Section 15 General Purpose Valves

## RM-1 Riser Manifolds – Commercial & Residential

Residential

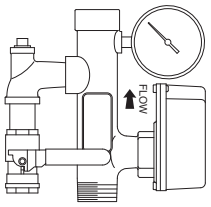


Commercial

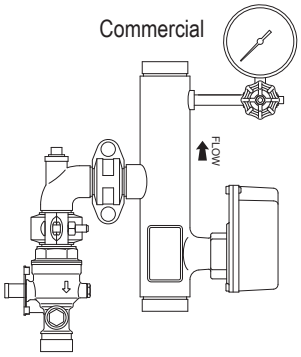


| Size | Description | Type | Part No. | List Price |
|---|---|---|---|---|
| 1 1/2" | Residential | Male Thread x Female Thread | **40571** | $1,212.40 |
| 1 1/2" | Commercial | Male Thread x Female Thread | **40551** | $2,518.17 |
| | **Optional Pressure Relief Valve and Trim Kit** | | | |
| 1" - 2" | Relief Kit RM-1 Residential 1", 1 1/2" and 2" | | **40711** | $757.82 |
| 4" - 6" | Relief Kit RM-1 Commercial 4" and 6" | | **40731** | $1,074.08 |
| | **Replacement Parts** | | | |
| – | Water Pressure Gauge 300psi (2000kPa) | | **90050001** | $90.55 |
| 1" | Flow Switch VSR-M 1" (DN25) | | **91144801** | $945.98 |
| 1 1/2" | Flow Switch VSR-M 1-1/2" (DN40) | | **91144815** | $1,123.64 |
| 2" | Flow Switch VSR-M 2" (DN50) | | **91144802** | $1,052.01 |
| 2 1/2" | Flow Switch VSR-M 2-1/2" (DN65) | | **91144825** | $1,015.25 |
| 3" | Flow Switch VSR-M 3" (DN80) | | **91144803** | $1,015.25 |
| 4" | Flow Switch VSR-M 4" (DN100) | | **91144804** | $1,026.94 |
| 6" | Flow Switch VSR-M 6" (DN150) | | **91144806** | $1,026.94 |
| – | Field Replaceable Retard/Switch assembly | | **91144800** | $503.34 |
| 1" | Ball Valve 1" (DN25) | | **97111603** | $88.70 |

**Technical Data Sheet - TFP963**

*See latest Technical Data Sheets for specific Approvals, Listings, Design Parameters & available finishes on www.tyco-fire.com.*

## Water Motor Alarm Model WMA-1

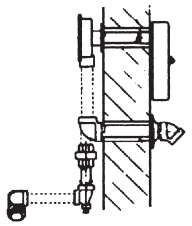

| Description | Part No. | List Price |
|---|---|---|
| WMA-1, (Aluminum), Complete with Trim | **52-630-2-001P** | $1,924.68 |
| WMA-1, (Red), Complete with Trim | **52-630-1-001P** | $1,924.68 |
| Optional Drain Trim | **52-630-2-002** | $526.16 |
| **Replacement Components for Water Motor Alarms** | | |
| Water Motor | **92-630-1-012** | $2,127.90 |
| Repair Kit: Striker, Gong (Red) and Cap Nut | **92-630-1-025** | $2,127.90 |
| **Replacement Trim Components** | | |
| 3/4" Strainer | **52-271-1-001** | $1,004.75 |
| 3/4" Check Valve | **52-403-1-005** | $898.89 |
| **Technical Data Sheet - TFP 921** | | |



*See latest Technical Data Sheets for specific Approvals, Listings, Design Parameters & available finishes on www.tyco-fire.com.*

Section 8 Wet System Valves
Section 9 Water Motor Alarms
Section 10 Dry Pipe Valves
Section 11 Quick Opening Devices
Section 12 Air Maintenance Devices
Section 13 Deluge Valves & Accessories
Section 14 Preaction Systems
Section 15 General Purpose Valves

*See latest Technical Data Sheets for specific Approvals, Listings, Design Parameters & available finishes on www.tyco-fire.com.*

## DPV-1 Dry Pipe Valve

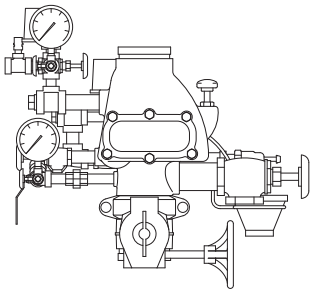

| Description | Part No. | List Price |
|---|---|---|
| **DPV-1 Pre-assembled Valve & Trim with Butterfly Valve** | | |
| 2½" DPV-1 Groove x Groove Pre-Trimmed with Butterfly Valve (Galvanized) | **52-310-3-925** | $13,331.56 |
| 3" DPV-1 Groove x Groove Pre-Trimmed with Butterfly Valve (Galvanized) | **52-310-3-930** | $13,331.56 |
| 4" DPV-1 Groove x Groove Pre-Trimmed with Butterfly Valve (Galvanized) | **52-310-3-940** | $13,471.13 |
| 6" DPV-1 Groove x Groove Pre-Trimmed with Butterfly Valve (Galvanized) | **52-310-3-960** | $15,789.01 |
| 2½" DPV-1 Groove x Groove Pre-Trimmed *without* Butterfly Valve (Galvanized) | **52-310-4-925** | $15,338.26 |
| 3" DPV-1 Groove x Groove Pre-Trimmed *without* Butterfly Valve (Galvanized) | **52-310-4-930** | $15,338.26 |
| 4" DPV-1 Groove x Groove Pre-Trimmed *without* Butterfly Valve (Galvanized) | **52-310-4-940** | $16,113.98 |
| 6" DPV-1 Groove x Groove Pre-Trimmed *without* Butterfly Valve (Galvanized) | **52-310-4-960** | $16,242.18 |
| 4" DPV-1 Flange x Groove Pre-Trimmed with Butterfly Valve(Galvanized) | **52-310-3-440** | $17,023.33 |
| 6" DPV-1 Flange x Groove Pre-Trimmed with Butterfly Valve (Galvanized) | **52-310-3-460** | $20,090.00 |
| 4" DPV-1 Flange x Flange Pre-Trimmed with Butterfly Valve (Galvanized) | **52-310-3-040** | $17,023.33 |
| 6" DPV-1 Flange x Flange Pre-Trimmed with Butterfly Valve (Galvanized) | **52-310-3-060** | $20,090.00 |
| **Note** | | |
| Pre-assembled includes alarm test valve and connections for gauges, priming, air supply, drains, pressure switches, couplings/flange adaptor and butterfly valve. | | |
| **DPV-1 Pre-assembled Valve & Trim, without Control Valve** | | |
| 4" DPV-1 Flange x Groove Pre-Trimmed (Galvanized) | **52-310-4-440** | $15,476.27 |
| 6" DPV-1 Flange x Groove Pre-Trimmed (Galvanized) | **52-310-4-460** | $16,302.15 |
| 6" DPV-1 Flange x Flange Pre-Trimmed (Galvanized) | **52-310-4-060** | $16,302.15 |
| **Note** | | |
| Pre-assembled includes alarm test valve and connections for gauges, priming, air supply, drains, and pressure switches. | | |
| **DPV-1 Bare Valve** | | |
| 2 1/2" Model DPV-1 Groove x Groove | **52-312-1-925** | $7,981.53 |
| 3" Model DPV-1 Groove x Groove | **52-312-1-930** | $9,397.35 |
| 4" Model DPV-1 Groove x Groove | **52-312-1-940** | $9,487.02 |
| 6" Model DPV-1 Groove x Groove | **52-312-1-960** | $12,643.29 |
| 4" Model DPV-1 Flange x Groove | **52-312-1-440** | $10,555.21 |
| 6" Model DPV-1 Flange x Groove | **52-312-1-460** | $13,169.75 |
| 4" Model DPV-1 Flange x Flange | **52-312-1-040** | $11,101.29 |
| 6" Model DPV-1 Flange x Flange | **52-312-1-060** | $13,970.95 |
| **DPV-1 Dry Pipe Valve Trim** | | |
| 2 1/2" and 3" DPV-1 Semi-Pre-assembled Trim (Galvanized) | **52-309-2-005** | $3,140.56 |
| 4" DPV-1 Semi-Pre-assembled Trim (Galvanized) | **52-309-2-001** | $3,462.57 |
| 6" DPV-1 Semi-Pre-assembled Trim (Galvanized) | **52-309-2-002** | $3,462.57 |
| 4" & 6" DPV-1 Semi-Pre-assembled Trim (Galvanized) | **52-309-2-106** | $582.07 |
| **Technical Data Sheet - TFP1020** | | |

**Note**

Please refer to Section 11 - Quick Opening Devices for the optional Model QRS Electronic Dry Pipe Valve Accelerator and the Model ACC-1 Mechanical Dry Pipe Valve Accelerator.

Section 8 Wet System Valves
Section 9 Water Motor Alarms
Section 10 Dry Pipe Valves
Section 11 Quick Opening Devices
Section 12 Air Maintenance Devices
Section 13 Deluge Valves & Accessories
Section 14 Preaction Systems
Section 15 General Purpose Valves

## DPV-1 Dry Pipe Valve

| *Description* | *Part No.* | *List Price* |
|---|---|---|
| **Replacement Parts for Model "DPV-1" Dry Pipe Valve** | | |
| 2 1/2" and 3" Clapper Assembly | **92-312-2203** | $3,499.46 |
| 4" Clapper Assembly | **92-312-2403** | $3,499.46 |
| 6" Clapper Assembly | **92-312-2603** | $6,296.09 |
| 2 1/2" and 3" Repair Parts Kit | **92-312-1204** | $605.82 |
| 4" Repair Parts Kit | **92-312-1404** | $605.82 |
| 6" Repair Parts Kit | **92-312-1604** | $908.20 |
| Reset Plunger Parts Kit | **92-312-1405** | $1,802.18 |
| Reset Knob | **92-312-1406** | $224.84 |
| Reset Plunger O-ring | **92-312-1407** | $37.88 |
| **Technical Data Sheet - TFP1020** | | |

*See latest Technical Data Sheets for specific Approvals, Listings, Design Parameters & available finishes on www.tyco-fire.com.*

## "VIZOR" Model EDPA - Electronic Dry Pipe Accelerator (Quick Opening Device)

| Description | | Part No. | List Price Each |
|---|---|---|---|
| 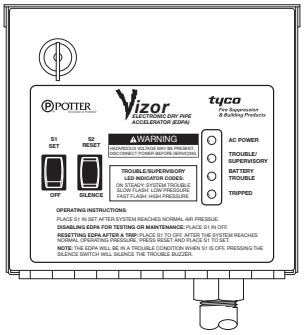 | **"VIZOR" - Electronic Dry Pipe Accelerator (EDPA) Switch**<br><br>Notes:<br>- Switch Only<br>- Batteries sold separately.<br>Requires two BT40 or BT10 batteries. | **52-312-3-000** | $6,617.62 |
| 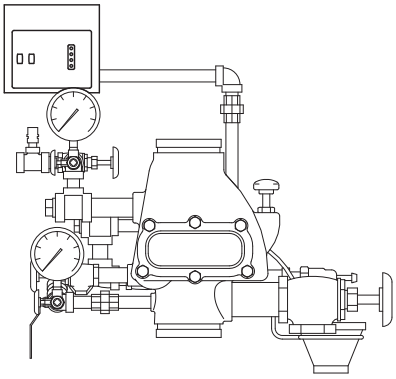 | **"VIZOR" - Electronic Dry Pipe Accelerator (EDPA) with the Model EDPA Trim for use with 4 or 6 inch Model DPV-1 Dry Pipe Valve**<br><br>(**Note**: DPV-1 Dry Pipe Valve and Batteries are not included) | **52-312-3-001** | $9,377.60 |
| VIZOR Battery Cabinet EDPA (For use with BT-40 only) | | **52-312-3-002** | $553.11 |
| Replacement Battery BT-40 (5 Amp) (Requires 2) | | **2654** | $408.11 |
| Replacement Battery BT-10 (1.3 Amp) (Requires 2) | | **2653** | $405.52 |
| Fuse Holder EDPA | | **2655** | $163.25 |
| Fuse 5 Amp EDPA | | **2657** | $13.91 |
| **Technical Data Sheet - TFP1105** | | | |

Section 8 Wet System Valves
Section 9 Water Motor Alarms
Section 10 Dry Pipe Valves
Section 11 Quick Opening Devices
Section 12 Air Maintenance Devices
Section 13 Deluge Valves & Accessories
Section 14 Preaction Systems
Section 15 General Purpose Valves

*See latest Technical Data Sheets for specific Approvals, Listings, Design Parameters & available finishes on www.tyco-fire.com.*

Section 8 Wet System Valves
Section 9 Water Motor Alarms
Section 10 Dry Pipe Valves
Section 11 Quick Opening Devices
Section 12 Air Maintenance Devices
Section 13 Deluge Valves & Accessories
Section 14 Preaction Systems
Section 15 General Purpose Valves

## Model QRS-2 Quick Release Switch – Electronic Accelerator for Dry Pipe or Preaction Systems

| Description | | Part No. | List Price |
|---|---|---|---|
| 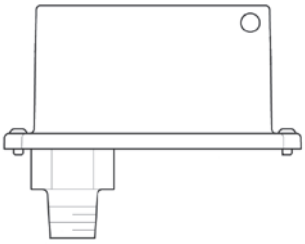 | Model QRS-2 Quick Release Switch (Switch Only) | **100300** | $5,200.00 |
| 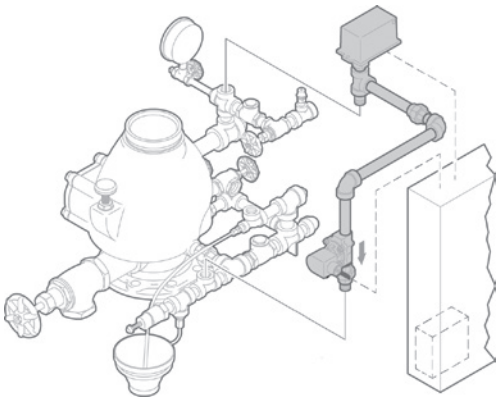 | **QRS-2 Kit Electronic Dry Pipe Valve Accelerator Package**<br>Includes:<br>1 - QRS-2 Quick Release Switch<br>1 - QRS-2 Trim,<br>1 - 24 VDC Solenoid Valve | **100300A** | $9,020.46 |
| | **Model QRS-2 Quick Release Switch Trim** | **100300T** | $448.50 |
| 24 VDC Solenoid Valve | | **52-287-1-124** | $4,606.11 |
| Replacement Battery BT-120 12.0 AH Battery | | **20128** | $452.30 |
| Replacement Battery BT-180 18.0 AH Battery | | **20121** | $598.91 |
| PFC-4410-G3 | | **20235** | $5,417.74 |
| **Technical Data Sheet - TFP1120** | | | |

*See latest Technical Data Sheets for specific Approvals, Listings, Design Parameters & available finishes on www.tyco-fire.com.*

## Dry Pipe Valve Accelerator, Model ACC-1

| | Description | Part No. | List Price |
|---|---|---|---|
| 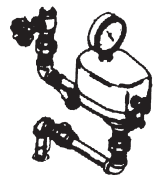 | Accelerator Only | **52-311-1-001P** | $3,758.23 |
| | Accelerator Trim (Galvanized) | **52-311-2-010** | $1,627.07 |
| | Accelerator "Package" | **52-311-2-002** | $6,630.66 |
| **Repair Parts for Dry Pipe Valve Accelerator, Model ACC-1** | | | |
| **Replacement Kit A** (See Datasheet for Additional Information)<br>Includes: 1-Plunger, 1-Exhaust Valve, 1-Cover Gasket, 1-O-Ring, 1-Restriction, 1-Latch, 1-O-Ring & 1.5 grams of FS3452 Fluorosilicone Grease | | **92-311-1-116P** | $3,362.20 |
| **Replacement Kit B** (See Datasheet for Additional Information)<br>Includes: 1-Pivot Plate Assembly, 4-Pan Head Machine Screws, 1-Cotter Pin, 1-Lever, 1-Retaining Ring, 1-Anti-Flood Valve, 1-Relief Valve, 1-Spring, 1-Relief Valve, 1-Spring, 1- Relief Valve Seat, 1-O-Ring, 1-Seal Washer, 1-Latch, 1-Anti-Flood Seat Assembly w/Ball Float & 1.5 grams of FS3452 Fluorosilicone Grease | | **92-311-1-117P** | $2,841.05 |
| **Replacement Kit C** (See Datasheet for Additional Information)<br>Includes: 1-Upper Diaphragm Plate, 6-Round Head Machine Screws, 1-Vent Plug, 1-Restriction Access Plate, 8-Fillerster Head Machine Screws, 1-Plug Seat, 1-O-Ring, 1-Reset Knob & 1.5 grams of FS3452 Fluorosilicone Grease | | **92-311-1-118P** | $5,196.60 |
| **Technical Data Sheet - TFP1112** | | | |



*See latest Technical Data Sheets for specific Approvals, Listings, Design Parameters & available finishes on www.tyco-fire.com.*

Section 8 Wet System Valves
Section 9 Water Motor Alarms
Section 10 Dry Pipe Valves
Section 11 Quick Opening Devices
Section 12 Air Maintenance Devices
Section 13 Deluge Valves & Accessories
Section 14 Preaction Systems
Section 15 General Purpose Valves

*See latest Technical Data Sheets for specific Approvals, Listings, Design Parameters & available finishes on www.tyco-fire.com.*

## Air Maintenance Devices

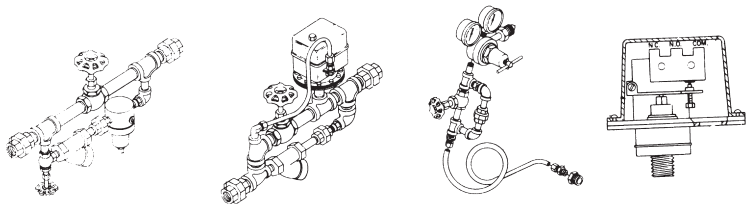

| Description | Part No. | List Price |
|---|---|---|
| AMD-1 Air Maintenance Device | **52-324-2-002** | $3,044.95 |
| AMD-2 Air Maintenance Device | **52-326-2-001** | $4,921.85 |
| AMD-3 Nitrogen Maintenance Device | **52-328-2-001** | $6,479.94 |
| **Replacement Parts for Air Supply Controls** | | |
| Pressure Regulator for Model AMD-1 | **92-324-1-012** | $2,517.83 |
| Pressure Switch for AMD-2 Device | **92-326-1-001** | $5,302.22 |
| Restrictor Check. Valve for AMD-1, AMD-2 and AMD-3 Device | **92-326-1-003** | $665.69 |
| **Technical Data Sheet - (AMD-1 - TFP1221), (AMD-2 - TFP1231) and (AMD-3 - TFP1241)** | | |

## Accessories for Air Maintenance Devices

| Description | Part No. | List Price |
|---|---|---|
| Low Pressure Alarm Switch PS40-1A | **25720** | $589.90 |
| Hi/Low Pressure Alarm Switch PS40-2A | **25730** | $699.60 |
| Strainer 1/4" for AMD | **52-353-1-002** | $183.99 |



*See latest Technical Data Sheets for specific Approvals, Listings, Design Parameters & available finishes on www.tyco-fire.com.*

Section 8 Wet System Valves
Section 9 Water Motor Alarms
Section 10 Dry Pipe Valves
Section 11 Quick Opening Devices
Section 12 Air Maintenance Devices
Section 13 Deluge Valves & Accessories
Section 14 Preaction Systems
Section 15 General Purpose Valves

*See latest Technical Data Sheets for specific Approvals, Listings, Design Parameters & available finishes on www.tyco-fire.com.*

## DV-5A Pre-Trimmed Deluge Systems - Wet Pilot, Dry Pilot, or Electric Pilot

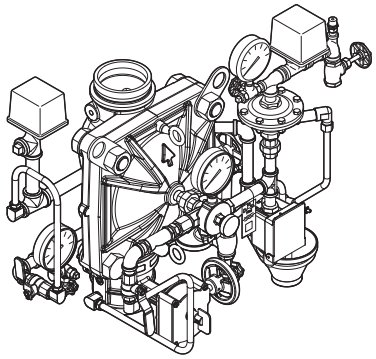

Dry Pilot Actuation Shown

**Each Pre-Trimmed Valve Contains:**
- Deluge Valve
- Galvanized Actuation Trim
- Pressure Switch(es)
- Dry Pneumatic Actuator
- Electric Solenoid Valve
- Butterfly Valve
- Couplings

**Each Pre-Trimmed Valve System Is Individually Palletized and Packaged**

| *Description* | *Part No.* | *List Price* |
|---|---|---|
| **Pre-trimmed, Deluge Wet Pilot Actuation, Groove x Groove** | | |
| 1-1/2" Pre-Trimmed DV-5A Deluge Valve with Wet Pilot Actuation (Galvanized) | **551010115** | $21,076.30 |
| 2" Pre-Trimmed DV-5A Deluge Valve with Wet Pilot Actuation (Galvanized) | **551010120** | $23,012.49 |
| 3" Pre-Trimmed DV-5A Deluge Valve with Wet Pilot Actuation (Galvanized) | **551010130** | $22,790.72 |
| 4" Pre-Trimmed DV-5A Deluge Valve with Wet Pilot Actuation (Galvanized) | **551010140** | $23,400.44 |
| 6" Pre-Trimmed DV-5A Deluge Valve with Wet Pilot Actuation (Galvanized) | **551010160** | $26,765.11 |
| 8" Pre-Trimmed DV-5A Deluge Valve with Wet Pilot Actuation (Galvanized) | **551010180** | $48,049.31 |
| **Pre-trimmed, Deluge Wet Pilot Actuation, No Shut Off Valve, Groove x Groove** | | |
| 1-1/2" Pre-Trimmed DV-5A Deluge Valve with Wet Pilot Actuation, No Shut Off Valve (Galvanized) | **550010115** | $11,125.63 |
| 2" Pre-Trimmed DV-5A Deluge Valve with Wet Pilot Actuation, No Shut Off Valve (Galvanized) | **550010120** | $11,428.38 |
| 3" Pre-Trimmed DV-5A Deluge Valve with Wet Pilot Actuation, No Shut Off Valve (Galvanized) | **550010130** | $12,757.02 |
| 4" Pre-Trimmed DV-5A Deluge Valve with Wet Pilot Actuation, No Shut Off Valve (Galvanized) | **550010140** | $16,289.68 |
| 6" Pre-Trimmed DV-5A Deluge Valve with Wet Pilot Actuation, No Shut Off Valve (Galvanized) | **550010160** | $18,116.56 |
| 8" Pre-Trimmed DV-5A Deluge Valve with Wet Pilot Actuation, No Shut Off Valve (Galvanized) | **550010180** | $33,115.66 |
| **Pre-trimmed, Deluge Wet Pilot Actuation, No Shut Off Valve, Flange x Flange** | | |
| 3" Pre-Trimmed DV-5A Deluge Valve with Wet Pilot Actuation, No Shut Off Valve (Galvanized) | **550020130** | $12,905.80 |
| 4" Pre-Trimmed DV-5A Deluge Valve with Wet Pilot Actuation, No Shut Off Valve (Galvanized) | **550020140** | $16,659.90 |
| 6" Pre-Trimmed DV-5A Deluge Valve with Wet Pilot Actuation, No Shut Off Valve (Galvanized) | **550020160** | $18,950.42 |
| 8" Pre-Trimmed DV-5A Deluge Valve with Wet Pilot Actuation, No Shut Off Valve (Galvanized) | **550020180** | $34,041.21 |
| **Technical Data Sheet - Wet Pilot Actuation - TFP1311** | | |
| **Pre-Trimmed, Deluge Dry Pilot Actuation, Groove x Groove** | | |
| 1-1/2" Pre-Trimmed DV-5A Deluge Valve with Dry Pilot Actuation (Galvanized) | **551010215** | $19,990.10 |
| 2" Pre-Trimmed DV-5A Deluge Valve with Dry Pilot Actuation (Galvanized) | **551010220** | $21,723.45 |
| 3" Pre-Trimmed DV-5A Deluge Valve with Dry Pilot Actuation (Galvanized) | **551010230** | $27,772.99 |
| 4" Pre-Trimmed DV-5A Deluge Valve with Dry Pilot Actuation (Galvanized) | **551010240** | $32,015.11 |
| 6" Pre-Trimmed DV-5A Deluge Valve with Dry Pilot Actuation (Galvanized) | **551010260** | $29,427.97 |
| 8" Pre-Trimmed DV-5A Deluge Valve with Dry Pilot Actuation (Galvanized) | **551010280** | $50,738.93 |
| **Pre-Trimmed, Deluge Dry Pilot Actuation, No Shut Off Valve, Groove x Groove** | | |
| 1-1/2" Pre-Trimmed DV-5A Deluge Valve with Dry Pilot Actuation, No Shut Off Valve (Galvanized) | **550010215** | $13,241.42 |
| 2" Pre-Trimmed DV-5A Deluge Valve with Dry Pilot Actuation, No Shut Off Valve (Galvanized) | **550010220** | $13,525.14 |
| 3" Pre-Trimmed DV-5A Deluge Valve with Dry Pilot Actuation, No Shut Off Valve (Galvanized) | **550010230** | $14,832.16 |
| 4" Pre-Trimmed DV-5A Deluge Valve with Dry Pilot Actuation, No Shut Off Valve (Galvanized) | **550010240** | $18,403.74 |
| 6" Pre-Trimmed DV-5A Deluge Valve with Dry Pilot Actuation, No Shut Off Valve (Galvanized) | **550010260** | $20,158.70 |
| 8" Pre-Trimmed DV-5A Deluge Valve with Dry Pilot Actuation, No Shut Off Valve (Galvanized) | **550010280** | $35,229.72 |



*Refer to the latest technical data sheets for specific approvals, listings, design parameters, and available options on www.tyco-fire.com.*

## DV-5A Pre-Trimmed Deluge Systems - Wet Pilot, Dry Pilot, or Electric Pilot

| | | |
|---|---|---|
| **Pre-Trimmed, Deluge Dry Pilot Actuation, No Shut Off Valve, Flange x Flange** | | |
| 3" Pre-Trimmed DV-5A Deluge Valve with Dry Pilot Actuation, No Shut Off Valve (Galvanized) | **550020230** | $15,019.86 |
| 4" Pre-Trimmed DV-5A Deluge Valve with Dry Pilot Actuation, No Shut Off Valve (Galvanized) | **550020240** | $18,724.81 |
| 6" Pre-Trimmed DV-5A Deluge Valve with Dry Pilot Actuation, No Shut Off Valve (Galvanized) | **550020260** | $20,990.36 |
| 8" Pre-Trimmed DV-5A Deluge Valve with Dry Pilot Actuation, No Shut Off Valve (Galvanized) | **550020280** | $36,155.27 |
| **Technical Data Sheet - Dry Pilot Actuation - TFP1316** | | |
| **Pre-Trimmed, Deluge Electric Actuation, Groove x Groove** | | |
| 1-1/2" Pre-Trimmed DV-5A Deluge Valve with Electric Actuation (Galvanized) | **551010315** | $24,244.23 |
| 2" Pre-Trimmed DV-5A Deluge Valve with Electric Actuation (Galvanized) | **551010320** | $23,401.45 |
| 3" Pre-Trimmed DV-5A Deluge Valve with Electric Actuation (Galvanized) | **551010330** | $16,496.12 |
| 4" Pre-Trimmed DV-5A Deluge Valve with Electric Actuation (Galvanized) | **551010340** | $25,975.37 |
| 6" Pre-Trimmed DV-5A Deluge Valve with Electric Actuation (Galvanized) | **551010360** | $30,105.75 |
| 8" Pre-Trimmed DV-5A Deluge Valve with Electric Actuation (Galvanized) | **551010380** | $51,973.84 |
| **Pre-Trimmed, Deluge Electric Actuation, No Shut Off Valve, Groove x Groove** | | |
| 1-1/2" Pre-Trimmed DV-5A Deluge Valve with Electric Actuation, No Shut Off Valve (Galvanized) | **550010315** | $13,089.18 |
| 2" Pre-Trimmed DV-5A Deluge Valve with Electric Actuation, No Shut Off Valve (Galvanized) | **550010320** | $10,039.48 |
| 3" Pre-Trimmed DV-5A Deluge Valve with Electric Actuation, No Shut Off Valve (Galvanized) | **550010330** | $14,682.05 |
| 4" Pre-Trimmed DV-5A Deluge Valve with Electric Actuation, No Shut Off Valve (Galvanized) | **550010340** | $18,205.46 |
| 6" Pre-Trimmed DV-5A Deluge Valve with Electric Actuation, No Shut Off Valve (Galvanized) | **550010360** | $20,027.54 |
| 8" Pre-Trimmed DV-5A Deluge Valve with Electric Actuation, No Shut Off Valve (Galvanized) | **550010380** | $47,513.59 |
| **Pre-Trimmed, Deluge Electric Actuation, No Shut Off Valve, Flange x Flange** | | |
| 3" Pre-Trimmed DV-5A Deluge Valve with Electric Actuation, No Shut Off Valve (Galvanized) | **550020330** | $14,867.62 |
| 4" Pre-Trimmed DV-5A Deluge Valve with Electric Actuation, No Shut Off Valve (Galvanized) | **550020340** | $18,574.70 |
| 6" Pre-Trimmed DV-5A Deluge Valve with Electric Actuation, No Shut Off Valve (Galvanized) | **550020360** | $21,902.21 |
| 8" Pre-Trimmed DV-5A Deluge Valve with Electric Actuation, No Shut Off Valve (Galvanized) | **550020380** | $36,006.49 |
| **Technical Data Sheet: Electric Actuation - TFP1321** | | |
| **Note:** These valves are also available pre-trimmed with out BFV in GxG, TxT, FxF and FxG | | |

*Refer to the latest technical data sheets for specific approvals, listings, design parameters, and available options on www.tyco-fire.com.*

## DV-5A Pre-trimmed Deluge Systems with Remote Resetting or Remote Resetting Pressure Reducing Trim

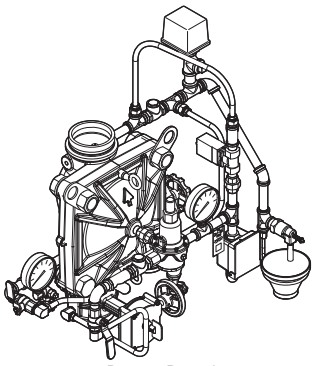

Remote Resetting
Pressure Reducing Shown

**Each Pre-Trimmed Valve Contains:**
- Deluge Valve
- Galvanized Actuation Trim
- Pressure Switch
- Latching Solenoid Valve
- Pressure Relief Valve (if applicable)
- Butterfly Valve
- Couplings

**Each Pre-Trimmed Valve System Is Individually Palletized, and Packaged**

| *Description* | *Part No.* | *List Price* |
|---|---|---|
| **Pre-trimmed, Deluge Remote Resetting Trim, Grooved x Grooved** | | |
| 1-1/2" Pre-Trimmed DV-5A Deluge Valve with Remote Resetting Actuation (Galvanized) | **551010415** | $26,213.58 |
| 2" Pre-Trimmed DV-5A Deluge Valve with Remote Resetting Actuation (Galvanized) | **551010420** | $23,826.74 |
| 3" Pre-Trimmed DV-5A Deluge Valve with Remote Resetting Actuation (Galvanized) | **551010430** | $26,933.97 |
| 4" Pre-Trimmed DV-5A Deluge Valve with Remote Resetting Actuation (Galvanized) | **551010440** | $31,768.98 |
| 6" Pre-Trimmed DV-5A Deluge Valve with Remote Resetting Actuation (Galvanized) | **551010460** | $34,834.41 |
| 8" Pre-Trimmed DV-5A Deluge Valve with Remote Resetting Actuation (Galvanized) | **551010480** | $51,122.99 |
| **Pre-trimmed, Deluge Remote Resetting Trim, No Shut Off Valve, Grooved x Grooved** | | |
| 1-1/2" Pre-Trimmed DV-5A Deluge Valve with Remote Resetting Actuation, No Shut Off Valve (Galvanized) | **550010415** | $17,450.51 |
| 2" Pre-Trimmed DV-5A Deluge Valve with Remote Resetting Actuation, No Shut Off Valve (Galvanized) | **550010420** | $17,753.26 |
| 3" Pre-Trimmed DV-5A Deluge Valve with Remote Resetting Actuation, No Shut Off Valve (Galvanized) | **550010430** | $21,007.39 |
| 4" Pre-Trimmed DV-5A Deluge Valve with Remote Resetting Actuation, No Shut Off Valve (Galvanized) | **550010440** | $24,937.95 |
| 6" Pre-Trimmed DV-5A Deluge Valve with Remote Resetting Actuation, No Shut Off Valve (Galvanized) | **550010460** | $26,745.80 |
| 8" Pre-Trimmed DV-5A Deluge Valve with Remote Resetting Actuation, No Shut Off Valve (Galvanized) | **550010480** | $39,101.46 |
| **Pre-trimmed, Deluge Remote Resetting Trim, No Shut Off Valve, Flange x Flange** | | |
| 3" Pre-Trimmed DV-5A Deluge Valve with Remote Resetting Actuation, No Shut Off Valve (Galvanized.) | **550020430** | $10,149.83 |
| 4" Pre-Trimmed DV-5A Deluge Valve with Remote Resetting Actuation, No Shut Off Valve (Galvanized.) | **550020440** | $25,308.17 |
| 6" Pre-Trimmed DV-5A Deluge Valve with Remote Resetting Actuation, No Shut Off Valve (Galvanized.) | **550020460** | $12,969.23 |
| 8" Pre-Trimmed DV-5A Deluge Valve with Remote Resetting Actuation, No Shut Off Valve (Galvanized.) | **550020480** | $19,171.91 |
| **Technical Data Sheet - TFP1325** | | |



*Refer to the latest technical data sheets for specific approvals, listings, design parameters, and available options on www.tyco-fire.com.*

Section 8 Wet System Valves
Section 9 Water Motor Alarms
Section 10 Dry Pipe Valves
Section 11 Quick Opening Devices
Section 12 Air Maintenance Devices
Section 13 Deluge Valves & Accessories
Section 14 Preaction Systems
Section 15 General Purpose Valves

## DV-5A Pre-trimmed Deluge Systems with Remote Resetting or Remote Resetting Pressure Reducing Trim

| | | |
|---|---|---|
| **Pre-trimmed, Deluge Remote Resetting Pressure Reducing Trim, Grooved x Grooved** | | |
| 3" Pre-Trimmed DV-5A Deluge Valve with Remote Resetting, Pressure Reducing Actuation (Galvanized) | **551010530** | $28,369.15 |
| 4" Pre-Trimmed DV-5A Deluge Valve with Remote Resetting, Pressure Reducing Actuation (Galvanized) | **551010540** | $32,716.48 |
| 6" Pre-Trimmed DV-5A Deluge Valve with Remote Resetting, Pressure Reducing Actuation (Galvanized) | **551010560** | $37,899.84 |
| 8" Pre-Trimmed DV-5A Deluge Valve with Remote Resetting, Pressure Reducing Actuation (Galvanized) | **551010580** | $57,365.31 |
| **Pre-trimmed, Deluge Remote Resetting Pressure Reducing Trim, No Shut Off Valve, Grooved x Grooved** | | |
| 1-1/2" Pre-Trimmed DV-5A Deluge Valve with Remote Resetting, Pressure Reducing Actuation, No Shut Off Valve (Galv.) | **550010515** | $20,566.24 |
| 2" Pre-Trimmed DV-5A Deluge Valve with Remote Resetting, Pressure Reducing Actuation, No Shut Off Valve (Galv.) | **550010520** | $20,868.99 |
| 3" Pre-Trimmed DV-5A Deluge Valve with Remote Resetting, Pressure Reducing Actuation, No Shut Off Valve (Galv.) | **550010530** | $22,428.93 |
| 4" Pre-Trimmed DV-5A Deluge Valve with Remote Resetting, Pressure Reducing Actuation, No Shut Off Valve (Galv.) | **550010540** | $25,998.41 |
| 6" Pre-Trimmed DV-5A Deluge Valve with Remote Resetting, Pressure Reducing Actuation, No Shut Off Valve (Galv.) | **550010560** | $29,314.85 |
| 8" Pre-Trimmed DV-5A Deluge Valve with Remote Resetting, Pressure Reducing Actuation, No Shut Off Valve (Galv.) | **550010580** | $44,313.95 |
| **Pre-trimmed, Deluge Remote Resetting Pressure Reducing Trim, No Shut Off Valve, Flange x Flange** | | |
| 3" Pre-Trimmed DV-5A Deluge Valve with Remote Resetting, Pressure Reducing Actuation, No Shut Off Valve (Galvanized) | **550020530** | $22,346.41 |
| 4" Pre-Trimmed DV-5A Deluge Valve with Remote Resetting, Pressure Reducing Actuation, No Shut Off Valve (Galvanized) | **550020540** | $26,100.51 |
| 6" Pre-Trimmed DV-5A Deluge Valve with Remote Resetting, Pressure Reducing Actuation, No Shut Off Valve (Galvanized) | **550020560** | $30,068.09 |
| 8" Pre-Trimmed DV-5A Deluge Valve with Remote Resetting, Pressure Reducing Actuation, No Shut Off Valve (Galvanized) | **550020580** | $45,239.50 |
| **Technical Data Sheet - TFP1326** | | |
| **Note:** These valves are also available pre-trimmed in FxF and FxG but without BFV | | |

## DV-5A Deluge Valves, Diaphragm Style and Deluge Trim Kits

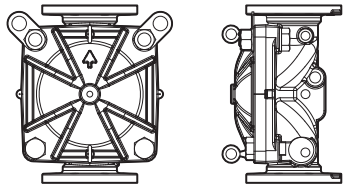

| *Description* | *Part No.* | *List Price* |
|---|---|---|
| 1-1/2" DV-5A Groove x Groove, 300 PSI | **530010015** | $7,539.80 |
| 2" DV-5A Groove x Groove, 300 PSI | **530010020** | $7,064.91 |
| 3" DV-5A Groove x Groove, 300 PSI | **530010030** | $5,655.68 |
| 4" DV-5A Groove x Groove, 300 PSI | **530010040** | $10,051.52 |
| 6" DV-5A Groove x Groove, 300 PSI | **530010060** | $17,288.61 |
| 8" DV-5A Groove x Groove, 300 PSI | **530010080** | $44,372.06 |
| 1-1/2" DV-5A Thread x Thread, 300 PSI | **530060015** | $7,113.00 |
| 2" DV-5A Thread x Thread, 300 PSI | **530060020** | $7,411.15 |
| 3" DV-5A Flange x Groove, 300 PSI | **530030030** | $5,363.52 |
| 4" DV-5A Flange x Groove, 300 PSI | **530030040** | $11,951.68 |
| 6" DV-5A Flange x Groove, 300 PSI | **530030060** | $17,897.32 |
| 8" DV-5A Flange x Groove, 300 PSI | **530030080** | $50,549.11 |
| 3" DV-5A Flange x Flange, 300 PSI | **530020030** | $8,794.10 |
| 4" DV-5A Flange x Flange, 300 PSI | **530020040** | $14,847.47 |
| 6" DV-5A Flange x Flange, 300 PSI | **530020060** | $19,310.74 |
| 8" DV-5A Flange x Flange, 300 PSI | **530020080** | $32,980.76 |

*Refer to the latest technical data sheets for specific approvals, listings, design parameters, and available options on www.tyco-fire.com.*

## DV-5A Deluge Valves, Diaphragm Style and Deluge Trim Kits

| Description | Part No. | List Price |
|---|---|---|
| **Trim Kits for DV-5A Deluge Valves Wet Actuation** | | |
| 1-1/2" and 2" Wet Pilot Actuation Trim Kit (Galvanized) | **540000120** | $7,123.32 |
| 3" Wet Pilot Actuation Trim Kit (Galvanized) | **540000130** | $7,123.32 |
| 4" Wet Pilot Actuation Trim Kit (Galvanized) | **540000140** | $9,556.07 |
| 6" Wet Pilot Actuation Trim Kit (Galvanized) | **540000160** | $9,632.48 |
| 8" Wet Pilot Actuation Trim Kit (Galvanized) | **540000180** | $9,703.29 |
| **Trim Kits for DV-5A Deluge Valves Dry Actuation** | | |
| 1-1/2" and 2" Dry Pilot Actuation Trim Kit (Galvanized) | **540000220A** | $13,121.11 |
| 3" Dry Pilot Actuation Trim Kit (Galvanized) | **540000230A** | $13,121.11 |
| 4" Dry Pilot Actuation Trim Kit (Galvanized) | **540000240A** | $13,514.24 |
| 6" Dry Pilot Actuation Trim Kit (Galvanized) | **540000260A** | $13,580.79 |
| 8" Dry Pilot Actuation Trim Kit (Galvanized) | **540000280A** | $8,576.95 |
| **Trim Kits for DV-5A Deluge Valves Electric Actuation** | | |
| 1-1/2" and 2" Electric Pilot Actuation Trim Kit (Galvanized) | **540000320** | $9,494.32 |
| 3" Electric Pilot Actuation Trim Kit (Galvanized) | **540000330** | $9,494.32 |
| 4" Electric Pilot Actuation Trim Kit (Galvanized) | **540000340** | $7,041.97 |
| 6" Electric Pilot Actuation Trim Kit (Galvanized) | **540000360** | $9,979.26 |
| 8" Electric Pilot Actuation Trim Kit (Galvanized) | **540000380** | $10,052.62 |
| **Trim Kits for DV-5A Deluge Valves Remote Reset** | | |
| 1-1/2" and 2" Remote Reset Actuation Trim Kit Galvanized | **540000420** | $7,670.51 |
| 3" Remote Reset Actuation Trim Kit Galvanized | **540000430** | $7,670.51 |
| 4" Remote Reset Actuation Trim Kit Galvanized | **540000440** | $7,858.73 |
| 6" Remote Reset Actuation Trim Kit Galvanized | **540000460** | $9,404.31 |
| 8" Remote Reset Actuation Trim Kit Galvanized | **540000480** | $9,475.66 |
| **Trim Kits for DV-5A Deluge Valves Remote Reset Pressure Reducing** | | |
| 3" Remote Reset Pressure Reducing Actuation Trim Kit (Galvanized) | **540000530** | $10,149.67 |
| 4" Remote Reset Pressure Reducing Actuation Trim Kit (Galvanized) | **540000540** | $10,295.88 |
| 6" Remote Reset Pressure Reducing Actuation Trim Kit (Galvanized) | **540000560** | $6,825.54 |
| 8" Remote Reset Pressure Reducing Actuation Trim Kit (Galvanized) | **540000580** | $9,224.73 |

**Technical Data Sheets:**
**Wet Pilot Actuation - TFP1311**
**Dry Pilot Actuation - TFP1316**
**Electric Actuation - TFP1321**
**Remote Resetting - TFP1325**
**Remote Resetting Pressure Reducing - TFP1326**



*Refer to the latest technical data sheets for specific approvals, listings, design parameters, and available options on www.tyco-fire.com.*

Section 8 Wet System Valves
Section 9 Water Motor Alarms
Section 10 Dry Pipe Valves
Section 11 Quick Opening Devices
Section 12 Air Maintenance Devices
Section 13 Deluge Valves & Accessories
Section 14 Preaction Systems
Section 15 General Purpose Valves

## Model DP-1, Dry Pilot Actuator

| Description | Part Number | List Price |
|---|---|---|
| 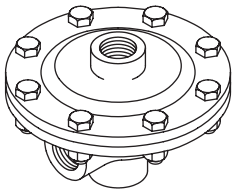 Dry Pilot Actuator Model DP-1 | **52-280-1-001P** | $3,894.41 |

**Technical Data Sheet - TFP1380**

## Deluge Valve Accessories

| Description | Part No. | List Price |
|---|---|---|
| 24 VDC Solenoid Valve 175psi (TFP2180) | **52-287-1-024** | $2,903.64 |
| 24 VDC Solenoid Valve - Standard Used 300psi (TFP2180) | **52-287-1-124** | $4,606.11 |
| 24 VDC Latching Solenoid Valve | **2460566** | $2,883.50 |
| DP-1 Dry Pilot Actuator | **52-280-1-001P** | $3,894.41 |
| Manual Control Station (MC-2 - TFP1382) | **545002000** | $1,762.69 |
| Model PS-10-2 Pressure Alarm Switch | **25710** | $669.46 |
| Model PS-40-2 Pressure Alarm Switch | **25730** | $699.60 |
| Model OSYSU-2 Monitor Switch | **2412** | $733.78 |
| Model WMA-1 Water Motor Alarm | **52-630-1-001P** | $1,924.68 |
| Model PFC 4410 Fire Control Panel | **20235** | $5,417.74 |
| Manual ResetActuator (MRA-1 TFP1387) | **545001000** | $1,428.16 |
| 600 psi Water Pressure Gauge | **923431004** | $708.17 |
| 300 psi Water Pressure Gauge | **92-343-1-005** | $306.72 |
| Model AMD-1 Air Maintenance Device (TFP1221) | **52-324-2-002** | $3,044.95 |
| Model AMD-2 Air Maintenance Device (TFP1231) | **52-326-2-001** | $4,921.85 |
| Model AMD-3 Nitrogen Air Maintenance Device (TFP1241) | **52-328-2-001** | $6,479.94 |
| Model AD-3 Automatic Drain Valve (TFP 1633) | **547932004** | $295.51 |
| 1/2" Y Strainer | **523531005** | $307.13 |
| 1/2" Spring Loaded Check Valve | **923221003** | $603.52 |
| Pilot Valve Pressure Reducing | **545100068** | $5,893.81 |
| 1/4" Relief Valve | **92-343-1-019** | $112.44 |
| Relief Pressure Valve 1/4" | **92-343-1-020** | $235.29 |

**Batteries - Two Batteries are required for Stand-by power for each Control Panel. Consult TD Sheets for ratings**

| Description | Part No. | List Price (each) |
|---|---|---|
| Model BT-80 (8 amp) Stand by Batteries, (2 REQ'D) | **2656** | $258.58 |
| Model BT-120 (12 amp) Stand by Batteries, (2 REQ'D) | **20128** | $452.30 |

**Notes**

Heat Detectors, Manual Control Stations, Alarm Bells, Trouble Horns, Spray Nozzles or Open Sprinklers are ordered separately
Contract your local TFP Distributor

*Refer to the latest technical data sheets for specific approvals, listings, design parameters, and available options on www.tyco-fire.com.*

## DV-5A Deluge Valve Replacement Parts

| Description | Part Number | List Price |
|---|---|---|
| 1-1/2" and 2" DV-5A Deluge Valve Replacement Diaphragm | **545000020** | $2,892.56 |
| 3" DV-5A Deluge Valve Replacement Diaphragm | **545000030** | $2,967.42 |
| 4" DV-5A Deluge Valve Replacement Diaphragm | **545000040** | $7,819.56 |
| 6" DV-5A Deluge Valve Replacement Diaphragm | **545000060** | $11,666.68 |
| 8" DV-5A Deluge Valve Replacement Diaphragm | **545000080** | $22,252.50 |
| 1 1/2" Groove x Threaded Outlet Welded Tee | **545004000** | $33.03 |
| 2" Groove x Threaded Outlet Welded Tee | **545004001** | $73.30 |
| 1-1/2" and 2" Hex Bolt, Short | **545100001** | $13.50 |
| 3" Hex Bolt, Short | **545100002** | POA |
| 4" and 8" Hex Bolt, Short | **545100003** | POA |
| 6" Hex Bolt, Short | **545100004** | POA |
| 1-1/2" and 2" Hex Bolt, Long | **545100011** | $13.50 |
| 3" Hex Bolt, Long | **545100012** | POA |
| 4" Hex Bolt, Long | **545100013** | POA |
| 6" Hex Bolt, Long | **545100014** | POA |
| 8"Hex Bolt, Long | **545100015** | $81.00 |
| 3" Lift Washer | **545100021** | POA |
| 4" and 8" Lift Washer | **545100022** | POA |
| 6" Lift Washer | **545100023** | POA |
| 3" Flat Washer | **545100024** | POA |
| 4" and 8" Flat Washer | **545100025** | $34.43 |
| 6" Flat Washer | **545100026** | POA |
| 1-1/2" and 2" Hex Nut | **545100031** | $8.10 |
| 3" Hex Nut | **545100032** | POA |
| 14" and 8" Hex Nut | **545100033** | POA |
| 6" Hex Nut | **545100034** | POA |
| Hoist Ring | **545100041** | POA |
| 1-1/2" Diaphragm Supply Rem. Reset Press Red. RRPR | **545100029** | POA |
| 2" Diaphragm Supply Rem. Reset Press Red. RRPR | **545100030** | POA |
| 3" Diaphragm Supply Rem. Reset Press Red. RRPR | **545100053** | $222.75 |
| 4" Diaphragm Supply Rem. Reset Press Red. RRPR | **545100055** | $222.75 |
| 6" Diaphragm Supply Rem. Reset Press Red. RRPR | **545100056** | $222.75 |
| 8" Diaphragm Supply Rem. Reset Press Red. RRPR | **545100057** | $222.75 |
| 3" Inverted Flare Shut-Off Valve | **545100099** | $182.70 |
| 1-1/2", 2", 4" 6" & 8" Inverted Flare Shut-Off Valve | **545100100** | $207.06 |
| 1-1/2" Tubing Assy, Diaphragm Chamber Supply | **535000115** | $554.40 |
| 2" Tubing Assy, Diaphragm Chamber Supply | **535000120** | $554.40 |
| 3" Tubing Assy, Diaphragm Chamber Supply | **535000130** | $831.60 |
| 4" Tubing Assy, Diaphragm Chamber Supply | **535000140** | $554.40 |
| 6" Tubing Assy, Diaphragm Chamber Supply | **535000160** | $554.40 |
| 8" Tubing Assy, Diaphragm Chamber Supply | **535000180** | $554.40 |
| 8" Tubing Assy, Diaphragm Chamber Supply | **540000080** | $290.51 |
| **Technical Data Sheets: Wet Pilot Actuation - TFP1311, Dry Pilot Actuation - TFP1316, Electric Actuation - TFP1321** | | |



*Refer to the latest technical data sheets for specific approvals, listings, design parameters, and available options on www.tyco-fire.com.*

*Refer to the latest technical data sheets for specific approvals, listings, design parameters, and available options on www.tyco-fire.com.*

## DV-5A Pre-trimmed Pre-action Systems Single Interlock - Wet Pilot, Dry Pilot, Electric Pilot

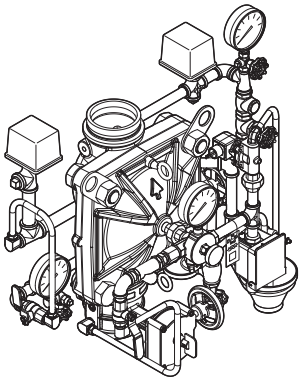

Electric Actuation Shown

**Each Pre-Trimmed Valve Contains:**
- Deluge Valve
- Galvanized Actuation Trim
- Pressure Switch (es)
- Dry: Pneumatic Actuator
- Electric: Solenoid Valve
- Butterfly Valve
- Couplings

**Each Pre-Trimmed Valve System is Individually Palletized and Packaged**

| *Description* | *Part No.* | *List Price* |
|---|---|---|
| **Pre-Trimmed, Single Interlock Wet Actuation, Groove x Groove** | | |
| 1½" Pre-Trimmed DV-5A Single Interlock Wet Actuation Trim (Galvanized) | **551011115** | $16,845.93 |
| 2" Pre-Trimmed DV-5A Single Interlock Wet Actuation Trim (Galvanized) | **551011120** | $15,783.59 |
| 3" Pre-Trimmed DV-5A Single Interlock Wet Actuation Trim (Galvanized) | **551011130** | $24,517.21 |
| 4" Pre-Trimmed DV-5A Single Interlock Wet Actuation Trim (Galvanized) | **551011140** | $17,722.34 |
| 6" Pre-Trimmed DV-5A Single Interlock Wet Actuation Trim (Galvanized) | **551011160** | $20,126.98 |
| 8" Pre-Trimmed DV-5A Single Interlock Wet Actuation Trim (Galvanized) | **551011180** | $35,582.39 |
| **Pre-Trimmed, Single Interlock Wet Actuation, No Shut Off Valve, Groove x Groove** | | |
| 1½" Pre-Trimmed DV-5A Single Interlock Wet Actuation Trim, No Shut Off Valve (Galvanized) | **550011115** | $12,032.15 |
| 2" Pre-Trimmed DV-5A Single Interlock Wet Actuation Trim, No Shut Off Valve (Galvanized) | **550011120** | $12,097.31 |
| 3" Pre-Trimmed DV-5A Single Interlock Wet Actuation Trim, No Shut Off Valve (Galvanized) | **550011130** | $13,248.34 |
| 4" Pre-Trimmed DV-5A Single Interlock Wet Actuation Trim, No Shut Off Valve (Galvanized) | **550011140** | $17,876.09 |
| 6" Pre-Trimmed DV-5A Single Interlock Wet Actuation Trim, No Shut Off Valve (Galvanized) | **550011160** | $19,779.09 |
| 8" Pre-Trimmed DV-5A Single Interlock Wet Actuation Trim, No Shut Off Valve (Galvanized) | **550011180** | $35,477.11 |
| **Pre-Trimmed, Single Interlock Wet Actuation, No Shut Off Valve, Flange x Flange** | | |
| 3" Pre-Trimmed DV-5A Single Interlock Wet Actuation Trim, No Shut Off Valve (Galvanized) | **550021130** | $13,397.12 |
| 4" Pre-Trimmed DV-5A Single Interlock Wet Actuation Trim, No Shut Off Valve (Galvanized) | **550021140** | $18,246.31 |
| 6" Pre-Trimmed DV-5A Single Interlock Wet Actuation Trim, No Shut Off Valve (Galvanized) | **550021160** | $20,611.22 |
| 8" Pre-Trimmed DV-5A Single Interlock Wet Actuation Trim, No Shut Off Valve (Galvanized) | **550021180** | $36,402.66 |



*Refer to the latest technical data sheets for specific approvals, listings, design parameters, and available options on www.tyco-fire.com.*

## DV-5A Pre-trimmed Pre-action Systems Single Interlock - Wet Pilot, Dry Pilot, Electric Pilot

| | | |
|---|---|---|
| **Pre-trimmed, Single Interlock Dry Actuation, Grooved x Grooved** | | |
| 1½" Pre-Trimmed DV-5A Single Interlock Dry Actuation Trim (Galvanized) | **551011215** | $14,523.21 |
| 2" Pre-Trimmed DV-5A Single Interlock Dry Actuation Trim (Galvanized) | **551011220** | $14,703.30 |
| 3" Pre-Trimmed DV-5A Single Interlock Dry Actuation Trim (Galvanized) | **551011230** | $15,137.62 |
| 4" Pre-Trimmed DV-5A Single Interlock Dry Actuation Trim (Galvanized) | **551011240** | $34,214.02 |
| 6" Pre-Trimmed DV-5A Single Interlock Dry Actuation Trim (Galvanized) | **551011260** | $38,425.55 |
| 8" Pre-Trimmed DV-5A Single Interlock Dry Actuation Trim (Galvanized) | **551011280** | $69,531.27 |
| **Pre-trimmed, Single Interlock Dry Actuation, No Shut Off Valve, Grooved x Grooved** | | |
| 1½" Pre-Trimmed DV-5A Single Interlock Dry Actuation Trim, No Shut Off Valve (Galvanized) | **550011215** | $13,919.58 |
| 2" Pre-Trimmed DV-5A Single Interlock Dry Actuation Trim, No Shut Off Valve (Galvanized) | **550011220** | $14,016.46 |
| 3" Pre-Trimmed DV-5A Single Interlock Dry Actuation Trim, No Shut Off Valve (Galvanized) | **550011230** | $15,135.77 |
| 4" Pre-Trimmed DV-5A Single Interlock Dry Actuation Trim, No Shut Off Valve (Galvanized) | **550011240** | $19,763.52 |
| 6" Pre-Trimmed DV-5A Single Interlock Dry Actuation Trim, No Shut Off Valve (Galvanized) | **550011260** | $21,666.52 |
| 8" Pre-Trimmed DV-5A Single Interlock Dry Actuation Trim, No Shut Off Valve (Galvanized) | **550011280** | $37,364.54 |
| **Pre-trimmed, Single Interlock Dry Actuation, No Shut Off Valve, Flange x Flange** | | |
| 3" Pre-Trimmed DV-5A Single Interlock Dry Actuation Trim, No Shut Off Valve (Galvanized) | **550021230** | $15,284.55 |
| 4" Pre-Trimmed DV-5A Single Interlock Dry Actuation Trim, No Shut Off Valve (Galvanized) | **550021240** | $20,133.74 |
| 6" Pre-Trimmed DV-5A Single Interlock Dry Actuation Trim, No Shut Off Valve (Galvanized) | **550021260** | $22,500.38 |
| 8" Pre-Trimmed DV-5A Single Interlock Dry Actuation Trim, No Shut Off Valve (Galvanized) | **550021280** | $38,290.09 |
| **Pre-trimmed, Single Interlock Electric Actuation, Grooved x Grooved** | | |
| 1½" Pre-Trimmed DV-5A Single Interlock Electric Actuation Trim (Galvanized) | **551011315** | $26,065.68 |
| 2" Pre-Trimmed DV-5A Single Interlock Electric Actuation Trim (Galvanized) | **551011320** | $26,316.11 |
| 3" Pre-Trimmed DV-5A Single Interlock Electric Actuation Trim (Galvanized) | **551011330** | $26,368.65 |
| 4" Pre-Trimmed DV-5A Single Interlock Electric Actuation Trim (Galvanized) | **551011340** | $31,185.53 |
| 6" Pre-Trimmed DV-5A Single Interlock Electric Actuation Trim (Galvanized) | **551011360** | $35,630.73 |
| 8" Pre-Trimmed DV-5A Single Interlock Electric Actuation Trim (Galvanized) | **551011380** | $60,972.01 |
| **Pre-trimmed, Single Interlock Electric Actuation, No Shut Off Valve, Grooved x Grooved** | | |
| 1½" Pre-Trimmed DV-5A Single Interlock Electric Actuation Trim (Galvanized) | **550011315** | $13,769.07 |
| 2" Pre-Trimmed DV-5A Single Interlock Electric Actuation Trim (Galvanized) | **550011320** | $13,883.25 |
| 3" Pre-Trimmed DV-5A Single Interlock Electric Actuation Trim (Galvanized) | **550011330** | $11,722.38 |
| 4" Pre-Trimmed DV-5A Single Interlock Electric Actuation Trim (Galvanized) | **550011340** | $16,143.00 |
| 6" Pre-Trimmed DV-5A Single Interlock Electric Actuation Trim (Galvanized) | **550011360** | $21,535.04 |
| 8" Pre-Trimmed DV-5A Single Interlock Electric Actuation Trim (Galvanized) | **550011380** | $37,214.03 |
| **Pre-trimmed, Single Interlock Electric Actuation, No Shut Off Valve, Flange x Flange** | | |
| 3" Pre-Trimmed DV-5A Single Interlock Electric Actuation Trim (Galvanized) | **550021330** | $15,132.31 |
| 4" Pre-Trimmed DV-5A Single Interlock Electric Actuation Trim (Galvanized) | **550021340** | $18,564.72 |
| 6" Pre-Trimmed DV-5A Single Interlock Electric Actuation Trim (Galvanized) | **550021360** | $22,368.90 |
| 8" Pre-Trimmed DV-5A Single Interlock Electric Actuation Trim (Galvanized) | **550021380** | $38,139.58 |

**Technical Data Sheets:**
**Single Interlock Wet Pilot Actuation - TFP1411**
**Single Interlock Dry Pilot Actuation - TFP1416**
**Single Interlock Electric Actuation - TFP1421**

**Note:** These valves are also available pre-trimmed with out BFV in GxG, TxT, FxF and FxG

*Refer to the latest technical data sheets for specific approvals, listings, design parameters, and available options on www.tyco-fire.com.*

## DV-5A Pre-trimmed Pre-action Systems Double Interlock - Electric/Pneumatic, Electric/Electric

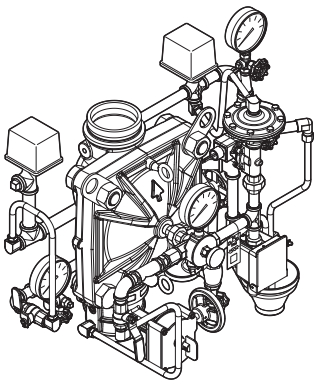

Electric/Pneumatic Actuation Shown

**Each Pre-Trimmed Valve Contains:**
- Deluge Valve
- Galvanized Actuation Trim
- Pressure Switch (es)
- Dry: Pneumatic Actuator
- Electric: Solenoid Valve
- Butterfly Valve
- Couplings

**Each Pre-Trimmed Valve System Is Individually Palletized and Packaged**

| *Description* | *Part No.* | *List Price* |
|---|---|---|
| **Pre-trimmed, Double Interlock Electric-Pneumatic Actuation, US Model Grooved x Grooved** | | |
| 1½" Pre-trimmed DV-5A Valve Double Interlock Electric/Pneumatic Pilot Actuation (Galvanized) | **551011415** | $28,932.52 |
| 2" Pre-trimmed DV-5A Valve Double Interlock Electric/Pneumatic Pilot Actuation (Galvanized) | **551011420** | $22,801.27 |
| 3" Pre-trimmed DV-5A Valve Double Interlock Electric/Pneumatic Pilot Actuation (Galvanized) | **551011430** | $23,375.82 |
| 4" Pre-trimmed DV-5A Valve Double Interlock Electric/Pneumatic Pilot Actuation (Galvanized) | **551011440** | $28,736.58 |
| 6" Pre-trimmed DV-5A Valve Double Interlock Electric/Pneumatic Pilot Actuation (Galvanized) | **551011460** | $27,036.21 |
| 8" Pre-trimmed DV-5A Valve Double Interlock Electric/Pneumatic Pilot Actuation (Galvanized) | **551011480** | $53,921.13 |
| **Pre-trimmed, Double Interlock Electric-Pneumatic Actuation, US Model, No Shut Off Valve, Grooved x Grooved** | | |
| 1½" Pre-trimmed DV-5A Valve Double Interlock Electric/Pneumatic Pilot Actuation, No Shut Off Valve, (Galv.) | **550011415** | $18,263.61 |
| 2" Pre-trimmed DV-5A Valve Double Interlock Electric/Pneumatic Pilot Actuation, No Shut Off Valve, (Galv.) | **550011420** | $18,265.34 |
| 3" Pre-trimmed DV-5A Valve Double Interlock Electric/Pneumatic Pilot Actuation, No Shut Off Valve, (Galv.) | **550011430** | $16,320.20 |
| 4" Pre-trimmed DV-5A Valve Double Interlock Electric/Pneumatic Pilot Actuation, No Shut Off Valve, (Galv.) | **550011440** | $23,067.82 |
| 6" Pre-trimmed DV-5A Valve Double Interlock Electric/Pneumatic Pilot Actuation, No Shut Off Valve, (Galv.) | **550011460** | $23,260.66 |
| 8" Pre-trimmed DV-5A Valve Double Interlock Electric/Pneumatic Pilot Actuation, No Shut Off Valve, (Galv.) | **550011480** | $41,141.13 |
| **Pre-trimmed, Double Interlock Electric-Pneumatic Actuation, US Model, No Shut Off Valve, Flange x Flange** | | |
| 3" Pre-trimmed DV-5A Valve Double Interlock Electric/Pneumatic Pilot Actuation, No Shut Off Valve, (Galv.) | **550021430** | $19,626.85 |
| 4" Pre-trimmed DV-5A Valve Double Interlock Electric/Pneumatic Pilot Actuation, No Shut Off Valve, (Galv.) | **550021440** | $23,438.04 |
| 6" Pre-trimmed DV-5A Valve Double Interlock Electric/Pneumatic Pilot Actuation, No Shut Off Valve, (Galv.) | **550021460** | $16,567.91 |
| 8" Pre-trimmed DV-5A Valve Double Interlock Electric/Pneumatic Pilot Actuation, No Shut Off Valve, (Galv.) | **550021480** | $42,066.68 |



*Refer to the latest technical data sheets for specific approvals, listings, design parameters, and available options on www.tyco-fire.com.*

| DV-5A Pre-trimmed Pre-action Systems Double Interlock - Electric/Pneumatic, Electric/Electric | | |
|---|---|---|
| **Pre-trimmed, Double Interlock Electric-Electric Actuation, US Model Grooved x Grooved** | | |
| 1½" Pre-trimmed DV-5A Valve Double Interlock Electric/Electric Pilot Actuation (Galvanized) | **551011515** | $27,081.65 |
| 2" Pre-trimmed DV-5A Valve Double Interlock Electric/Electric Pilot Actuation (Galvanized) | **551011520** | $21,258.74 |
| 3" Pre-trimmed DV-5A Valve Double Interlock Electric/Electric Pilot Actuation (Galvanized) | **551011530** | $22,220.32 |
| 4" Pre-trimmed DV-5A Valve Double Interlock Electric/Electric Pilot Actuation (Galvanized) | **551011540** | $30,317.74 |
| 6" Pre-trimmed DV-5A Valve Double Interlock Electric/Electric Pilot Actuation (Galvanized) | **551011560** | $40,731.12 |
| 8" Pre-trimmed DV-5A Valve Double Interlock Electric/Electric Pilot Actuation (Galvanized) | **551011580** | $42,290.98 |
| **Pre-trimmed, Double Interlock Electric-Electric Actuation, US Model, No Shut Off Valve, Grooved x Grooved** | | |
| 1½" Pre-trimmed DV-5A Valve Double Interlock Electric/Electric Pilot Actuation, No Shut Off Valve, (Galv.) | **550011515** | $13,919.58 |
| 2" Pre-trimmed DV-5A Valve Double Interlock Electric/Electric Pilot Actuation, No Shut Off Valve, (Galv.) | **550011520** | $14,016.46 |
| 3" Pre-trimmed DV-5A Valve Double Interlock Electric/Electric Pilot Actuation (Galvanized) | **550011530** | $16,280.16 |
| 4" Pre-trimmed DV-5A Valve Double Interlock Electric/Electric Pilot Actuation (Galvanized) | **550011540** | $19,763.52 |
| 6" Pre-trimmed DV-5A Valve Double Interlock Electric/Electric Pilot Actuation (Galvanized) | **550011560** | $15,536.46 |
| 8" Pre-trimmed DV-5A Valve Double Interlock Electric/Electric Pilot Actuation (Galvanized) | **550011580** | $37,364.54 |
| **Pre-trimmed, Double Interlock Electric-Electric Actuation, US Model, No Shut Off Valve, Flange x Flange** | | |
| 3" Pre-trimmed DV-5A Valve Double Interlock Electric/Electric Pilot Actuation (Galvanized) | **550021530** | $15,284.55 |
| 4" Pre-trimmed DV-5A Valve Double Interlock Electric/Electric Pilot Actuation (Galvanized) | **550021540** | $20,133.74 |
| 6" Pre-trimmed DV-5A Valve Double Interlock Electric/Electric Pilot Actuation (Galvanized) | **550021560** | $22,500.38 |
| 8" Pre-trimmed DV-5A Valve Double Interlock Electric/Electric Pilot Actuation (Galvanized) | **550021580** | $38,290.09 |
| **Technical Data Sheets:**<br>**Double Interlock Electric/Pneumatic Actuation - TFP1461**<br>**Double Interlock Electric/Electric Actuation - TFP1466** | | |
| **Note:** These valves are also available pre-trimmed with out BFV in GxG, TxT, FxF and FxG | | |

*Refer to the latest technical data sheets for specific approvals, listings, design parameters, and available options on www.tyco-fire.com.*

## DV-5A Deluge Valves, Diaphragm Style and Pre-action Trim Kits

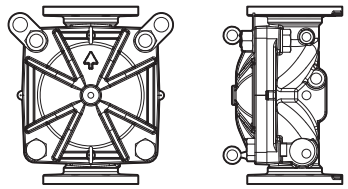

| Description | Part No. | List Price |
|---|---|---|
| 1 1/2" DV-5A Groove x Groove, 300 PSI | **530010015** | $7,539.80 |
| 2" DV-5A Groove x Groove, 300 PSI | **530010020** | $7,064.91 |
| 3" DV-5A Groove x Groove, 300 PSI | **530010030** | $5,655.68 |
| 4" DV-5A Groove x Groove, 300 PSI | **530010040** | $10,051.52 |
| 6" DV-5A Groove x Groove, 300 PSI | **530010060** | $17,288.61 |
| 8" DV-5A Groove x Groove, 300 PSI | **530010080** | $44,372.06 |
| 1 1/2" DV-5A Thread x Thread, 300 PSI | **530060015** | $7,113.00 |
| 2" DV-5A Thread x Thread, 300 PSI | **530060020** | $7,411.15 |
| 3" DV-5A Flange x Groove, 300 PSI | **530030030** | $5,363.52 |
| 4" DV-5A Flange x Groove, 300 PSI | **530030040** | $11,951.68 |
| 6" DV-5A Flange x Groove, 300 PSI | **530030060** | $17,897.32 |
| 8" DV-5A Flange x Groove, 300 PSI | **530030080** | $50,549.11 |
| 3" DV-5A Flange x Flange, 300 PSI | **530020030** | $8,794.10 |
| 4" DV-5A Flange x Flange, 300 PSI | **530020040** | $14,847.47 |
| 6" DV-5A Flange x Flange, 300 PSI | **530020060** | $19,310.74 |
| 8" DV-5A Flange x Flange, 300 PSI | **530020080** | $32,980.76 |
| **Trim Kits for DV-5A Deluge Valves Single Interlock Wet Pilot Actuation** | | |
| 1½" and 2" Single Interlock Wet Pilot Actuation Trim Kit (Galvanized) | **540001120** | $12,299.65 |
| 3" Single Interlock Wet Pilot Actuation Trim Kit (Galvanized) | **540001130** | $13,081.55 |
| 4" Single Interlock Wet Pilot Actuation Trim Kit (Galvanized) | **540001140** | $13,606.65 |
| 6" Single Interlock Wet Pilot Actuation Trim Kit (Galvanized) | **540001160** | $13,868.37 |
| 8" Single Interlock Wet Pilot Actuation Trim Kit (Galvanized) | **540001180** | $10,977.89 |
| **Trim Kits for DV-5A Deluge Valves Single Interlock Dry Pilot Actuation** | | |
| 1½" and 2" Single Interlock Dry Pilot Actuation Trim Kit (Galvanized) | **540001220A** | $12,397.45 |
| 3" Single Interlock Dry Pilot Actuation Trim Kit (Galvanized) | **540001230A** | $13,018.98 |
| 4" Single Interlock Dry Pilot Actuation Trim Kit (Galvanized) | **540001240A** | $20,721.11 |
| 6" Single Interlock Dry Pilot Actuation Trim Kit (Galvanized) | **540001260A** | $21,037.15 |
| 8" Single Interlock Dry Pilot Actuation Trim Kit (Galvanized) | **540001280A** | $21,353.20 |
| **Trim Kits for DV-5A Deluge Valves Single Interlock Electric Actuation** | | |
| 1½" and 2" Single Interlock Electric Pilot Actuation Trim Kit (Galvanized) | **540001320** | $11,152.45 |
| 3" Single Interlock Electric Pilot Actuation Trim Kit (Galvanized) | **540001330** | $11,848.11 |
| 4" Single Interlock Electric Pilot Actuation Trim Kit (Galvanized) | **540001340** | $16,642.06 |
| 6" Single Interlock Electric Pilot Actuation Trim Kit (Galvanized) | **540001360** | $16,956.15 |
| 8" Single Interlock Electric Pilot Actuation Trim Kit (Galvanized) | **540001380** | $17,268.25 |



*Refer to the latest technical data sheets for specific approvals, listings, design parameters, and available options on www.tyco-fire.com.*

## DV-5A Deluge Valves, Diaphragm Style and Pre-action Trim Kits (cont.)

| *Description* | *Part No.* | *List Price* |
|---|---|---|
| **Trim Kits for DV-5A Deluge Valves Double Interlock Electric/Pneumatic Actuation** | | |
| 1½" and 2" Double Interlock Electric/Pneumatic Pilot Actuation Trim Kit (Galvanized) | **540001420A** | $19,512.65 |
| 3" Double Interlock Electric/Pneumatic Pilot Actuation Trim Kit (Galvanized) | **540001430A** | $20,721.11 |
| 4" Double Interlock Electric/Pneumatic Pilot Actuation Trim Kit (Galvanized) | **540001440A** | $21,353.22 |
| 6" Double Interlock Electric/Pneumatic Pilot Actuation Trim Kit (Galvanized) | **540001460A** | $21,669.28 |
| 8" Double Interlock Electric/Pneumatic Pilot Actuation Trim Kit (Galvanized) | **540001480A** | $19,969.69 |
| **Trim Kits for DV-5A Deluge Valves Double Interlock Electric/Electric Actuation** | | |
| 1½" and 2" Double Interlock Electric/Electric Pilot Actuation Trim Kit (Galvanized) | **540001520** | $14,220.43 |
| 3" Double Interlock Electric/Electric Pilot Actuation Trim Kit (Galvanized) | **540001530** | $15,107.46 |
| 4" Double Interlock Electric/Electric Pilot Actuation Trim Kit (Galvanized) | **540001540** | $14,530.50 |
| 6" Double Interlock Electric/Electric Pilot Actuation Trim Kit (Galvanized) | **540001560** | $14,563.87 |
| 8" Double Interlock Electric/Electric Pilot Actuation Trim Kit (Galvanized) | **540001580** | $15,971.38 |

**Technical Data Sheets:**
**ingle Interlock Wet Pilot Actuation - TFP1411**
**Single Interlock Dry Pilot Actuation - TFP1416**
**Single Interlock Electric Actuation - TFP1421**
**Double Interlock Electric/Pneumatic Actuation - TFP1461**
**Double Interlock Electric/Electric Actuation - TFP1466**

## Model DP-1, Dry Pilot Actuator

| *Description* | | *Part Number* | *List Price* |
|---|---|---|---|
| 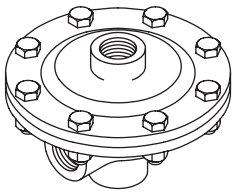 | Dry Pilot Actuator Model DP-1 | **52-280-1-001P** | $3,894.41 |

**Technical Data Sheet - TFP1380**

*Refer to the latest technical data sheets for specific approvals, listings, design parameters, and available options on www.tyco-fire.com.*

## DV-5A Deluge Valve Accessories for Wet, Dry, Electric, Remote Reset and Remote Reset Pressure Reducing Actuation

| Description | Part No. | List Price |
|---|---|---|
| 24 VDC Solenoid Valve 175psi (TFP2180) | **52-287-1-024** | $2,903.64 |
| 24 VDC Solenoid Valve - Standard Used 300psi (TFP2180) | **52-287-1-124** | $4,606.11 |
| DP-1 Dry Pilot Actuator | **52-280-1-001P** | $3,894.41 |
| Manual Control Station (MC-2 - TFP1382) | **545002000** | $1,762.69 |
| Model PS-10-2 Pressure Alarm Switch | **25710** | $669.46 |
| Model PS-40-2 Pressure Alarm Switch | **25730** | $699.60 |
| Model OSYSU-2 Monitor Switch | **2412** | $733.78 |
| Model WMA-1 Water Motor Alarm | **52-630-1-001P** | $1,924.68 |
| Model PFC 4410 Fire Control Panel | **20235** | $5,417.74 |
| Manual Reset Actuator (MRA-1 TFP1387) | **545001000** | $1,428.16 |
| Model MRA-1 Manual Reset Actuator Replacement Parts Kit | **545003010** | $168.80 |
| 600 psi Water Pressure Gauge | **923431004** | $708.17 |
| 300 psi Water Pressure Gauge | **92-343-1-005** | $306.72 |
| Model AMD-1 Air Maintenance Device (TFP1221) | **52-324-2-002** | $3,044.95 |
| Model AMD-2 Air Maintenance Device (TFP1231) | **52-326-2-001** | $4,921.85 |
| Model AMD-3 Nitrogen Air Maintenance Device (TFP1241) | **52-328-2-001** | $6,479.94 |
| Model AD-3 Automatic Drain Valve (TFP 1633) | **547932004** | $295.51 |
| ½" Y Strainer | **523531005** | $307.13 |
| ½" Spring Loaded Check Valve | **923221003** | $603.52 |
| Model G16AC812 Supervisory Air Supply | **52-150-1-001** | $14,827.92 |

**Batteries - Two Batteries are required for Stand-by power for each Control Panel. Consult TD Sheets for ratings**

| Description | Part No. | List Price (each) |
|---|---|---|
| Model BT-80 (8 amp) Stand by Batteries, (2 REQ'D) | **2656** | $258.58 |
| Model BT-120 (12 amp) Stand by Batteries, (2 REQ'D) | **20128** | $452.30 |

**Notes**

Heat Detectors, Manual Control Stations, Alarm Bells, Trouble Horns, Spray Nozzles or Open Sprinklers are ordered separately
Contract your local TFP Distributor

Section 8 Wet System Valves
Section 9 Water Motor Alarms
Section 10 Dry Pipe Valves
Section 11 Quick Opening Devices
Section 12 Air Maintenance Devices
Section 13 Deluge Valves & Accessories
Section 14 Preaction Systems
Section 15 General Purpose Valves

## DV-5A Deluge Valve Replacement Parts

| *Description* | *Part Number* | *List Price* |
|---|---|---|
| 1-1/2" and 2" DV-5A Deluge Valve Replacement Diaphragm | **545000020** | $2,892.56 |
| 3" DV-5A Deluge Valve Replacement Diaphragm | **545000030** | $2,967.42 |
| 4" DV-5A Deluge Valve Replacement Diaphragm | **545000040** | $7,819.56 |
| 6" DV-5A Deluge Valve Replacement Diaphragm | **545000060** | $11,666.68 |
| 8" DV-5A Deluge Valve Replacement Diaphragm | **545000080** | $22,252.50 |
| 6" Tubing, DP-2 Drain | **535001260** | $168.00 |
| 8" Tubing, DP-2 Drain | **535001280** | $136.18 |
| 1-1/2" Tubing Assy, Actuation Interconnect | **535001320** | POA |
| 2" Tubing Assy, Actuation Interconnect | **535001330** | POA |
| 3" Tubing Assy, Actuation Interconnect | **535001340** | POA |
| 4" Tubing Assy, Actuation Interconnect | **535001360** | $302.40 |
| 6" Tubing Assy, Actuation Interconnect | **535001380** | $252.34 |
| 1-1/2" Tubing Assy, Diaphragm Chamber Supply | **540000015** | $289.70 |
| 2" Tubing Assy, Diaphragm Chamber Supply | **540000020** | $433.12 |
| 3" Tubing Assy, Diaphragm Chamber Supply | **540000030** | $231.66 |
| 4" Tubing Assy, Diaphragm Chamber Supply | **540000040** | $217.03 |
| 6" Tubing Assy, Diaphragm Chamber Supply | **540000060** | $408.59 |
| Notes: Other Valve Replacement Parts can be found in TFP1306 | | |

*Refer to the latest technical data sheets for specific approvals, listings, design parameters, and available options on www.tyco-fire.com.*

## Red-E Cabinet With DV-5A Deluge Valve, Preaction, Single Interlock, Double Interlock and Deluge Packages

**P/N 530 X XX X X X X**

| Cabinet DV-5A | Size | Actuation Device | Air Maintenance Device | Trim Type | Control Panel | Compressor |
|---|---|---|---|---|---|---|
| 530 | 1-1/2" - DN40 = 1 | Deluge Wet = 01 | None = 0 | Galvanized = 1 | None = 0 | None = 0 |
| | 2" - DN50 = 2 | Deluge Dry = 02 | AMD-1 = 1 | | Included = A | 1/6 hp 125 Gal = 1 |
| | 3" - DN80 = 3 | Deluge Electric = 03 | AMD-2 = 2 | | For Orders With No Control Panel, Deduct $350 From The Price | 1/3 hp 250 Gal = 2 |
| | 4" - DN100 = 4 | Deluge Remote Resetting = 04 | AMD-3 = 3 | | | 1/2 hp 365 Gal = 3 |
| | 6" - DN150 = 6 | Deluge Remote Resetting Pressure Reducing = 05 | | | | 3/4 hp 430 Gal = 4 |
| | 8" - DN200 = 8 | Single Interlock Wet = 11 | | | | 1 hp 615 Gal = 5 |
| | | Single Interlock Dry = 12 | | | | 1-1/2 hp 915 Gal = 6 |
| | | Single Interlock Electric = 13 | | | | 2 hp 1225 Gal = 7 * |
| | | Double Interlock Electric / Pneumatic =14 | | | | S/I Compressor = 8 |
| | | Double Interlock Electric / Electric = 15 | | | | |
| | | Preaction Typ A = 16 | | | | |

* Requires 230V/60Hz

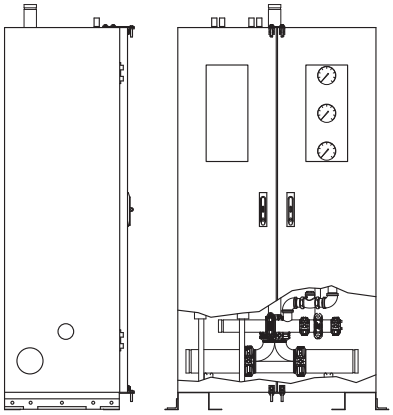

**Note:**

**All quotes are FOB manufacturer and are considered "Special Order" and are Non-Returnable.**

**For orders with no Control Panel, deduct $350 from the price**

**Please see "Terms & Conditions"**

### Single Interlock Preaction – Electric

| *Description* | *Size* | *Compressor* | *Part No.* | *List Price* |
|---|---|---|---|---|
| Red-E DV-5A - 1½" Single Interlock Preaction with Electric actuation, Galvanized trim, Control Panel | 1½" | S/I | **53011301A8** | $71,968.78 |
| Red-E DV-5A - 2" Single Interlock Preaction with Electric actuation, Galvanized trim, Control Panel | 2" | S/I | **53021301A8** | $74,260.95 |
| Red-E DV-5A - 3" Single Interlock Preaction with Electric actuation, Galvanized trim, Control Panel | 3" | S/I | **53031301A8** | $101,961.91 |
| Red-E DV-5A - 4" Single Interlock Preaction with Electric actuation, Galvanized trim, Control Panel | 4" | S/I | **53041301A8** | $99,917.40 |
| Red-E DV-5A - 6" Single Interlock Preaction with Electric actuation, Galvanized trim, Control Panel | 6" | S/I | **53061301A8** | $88,492.83 |
| Red-E DV-5A - 8" Single Interlock Preaction with Electric actuation, Galvanized trim, Control Panel | 8" | S/I | **53081301A8** | POA |
| "S/I" Compressor is a Single Interlock Compressor | | | | |

Section 8 Wet System Valves
Section 9 Water Motor Alarms
Section 10 Dry Pipe Valves
Section 11 Quick Opening Devices
Section 12 Air Maintenance Devices
Section 13 Deluge Valves & Accessories
Section 14 Preaction Systems
Section 15 General Purpose Valves

## Red-E Cabinet With DV-5A Deluge Valve, Preaction, Single Interlock, Double Interlock and Deluge Packages

### Double Interlock Preaction – Electric/Pneumatic Actuation with Panel

| Description | Size | Compressor | Part No. | List Price |
|---|---|---|---|---|
| Red-E DV-5A - 1½" Double Interlock Preaction with Electric/Pneumatic actuation, Galvanized trim, Control Panel | 1½" | 1/6Hp | **53011401A1** | $78,015.46 |
| Red-E DV-5A - 1½" Double Interlock Preaction with Electric/Pneumatic actuation, Galvanized trim, Control Panel | | 1/3Hp | **53011401A2** | $79,630.66 |
| Red-E DV-5A - 1½" Double Interlock Preaction with Electric/Pneumatic actuation, Galvanized trim, Control Panel | | 1/2Hp | **53011401A3** | $81,151.76 |
| Red-E DV-5A - 2" Double Interlock Preaction with Electric/Pneumatic actuation, Galvanized trim, Control Panel | 2" | 1/6Hp | **53021401A1** | $84,884.08 |
| Red-E DV-5A - 2" Double Interlock Preaction with Electric/Pneumatic actuation, Galvanized trim, Control Panel | | 1/3Hp | **53021401A2** | $86,556.09 |
| Red-E DV-5A - 2" Double Interlock Preaction with Electric/Pneumatic actuation, Galvanized trim, Control Panel | | 1/2Hp | **53021401A3** | $88,177.43 |
| Red-E DV-5A - 3" Double Interlock Preaction with Electric/Pneumatic actuation, Galvanized trim, Control Panel | 3" | 1/6Hp | **53031401A1** | $93,029.32 |
| Red-E DV-5A - 3" Double Interlock Preaction with Electric/Pneumatic actuation, Galvanized trim, Control Panel | | 1/3Hp | **53031401A2** | $101,891.59 |
| Red-E DV-5A - 3" Double Interlock Preaction with Electric/Pneumatic actuation, Galvanized trim, Control Panel | | 1/2Hp | **53031401A3** | $103,796.28 |
| Red-E DV-5A - 4" Double Interlock Preaction with Electric/Pneumatic actuation, Galvanized trim, Control Panel | 4" | 1/6Hp | **53041401A1** | $106,938.05 |
| Red-E DV-5A - 4" Double Interlock Preaction with Electric/Pneumatic actuation, Galvanized trim, Control Panel | | 1/3Hp | **53041401A2** | $101,393.60 |
| Red-E DV-5A - 4" Double Interlock Preaction with Electric/Pneumatic actuation, Galvanized trim, Control Panel | | 1/2Hp | **53041401A3** | $90,160.53 |
| Red-E DV-5A - 4" Double Interlock Preaction with Electric/Pneumatic actuation, Galvanized trim, Control Panel | | 3/4Hp | **53041401A4** | $92,272.54 |
| Red-E DV-5A - 4" Double Interlock Preaction with Electric/Pneumatic actuation, Galvanized trim, Control Panel | | 1Hp | **53041401A5** | $92,496.54 |
| Red-E DV-5A - 4" Double Interlock Preaction with Electric/Pneumatic actuation, Galvanized trim, Control Panel | | 1-1/2Hp | **53041401A6** | $97,872.58 |
| Red-E DV-5A - 4" Double Interlock Preaction with Electric/Pneumatic actuation, Galvanized trim, Control Panel | | 2Hp | **53041401A7** | $99,344.59 |
| Red-E DV-5A - 6" Double Interlock Preaction with Electric/Pneumatic actuation, Galvanized trim, Control Panel | 6" | 1/6Hp | **53061401A1** | $91,584.55 |
| Red-E DV-5A - 6" Double Interlock Preaction with Electric/Pneumatic actuation, Galvanized trim, Control Panel | | 1/3Hp | **53061401A2** | $93,136.55 |
| Red-E DV-5A - 6" Double Interlock Preaction with Electric/Pneumatic actuation, Galvanized trim, Control Panel | | 1/2Hp | **53061401A3** | $94,704.56 |
| Red-E DV-5A - 6" Double Interlock Preaction with Electric/Pneumatic actuation, Galvanized trim, Control Panel | | 3/4Hp | **53061401A4** | $95,328.57 |
| Red-E DV-5A - 6" Double Interlock Preaction with Electric/Pneumatic actuation, Galvanized trim, Control Panel | | 1Hp | **53061401A5** | $111,760.95 |
| Red-E DV-5A - 6" Double Interlock Preaction with Electric/Pneumatic actuation, Galvanized trim, Control Panel | | 1-1/2Hp | **53061401A6** | $118,229.95 |
| Red-E DV-5A - 6" Double Interlock Preaction with Electric/Pneumatic actuation, Galvanized trim, Control Panel | | 2Hp | **53061401A7** | $118,377.40 |

*Refer to the latest technical data sheets for specific approvals, listings, design parameters, and available options on www.tyco-fire.com.*

## Red-E Cabinet With DV-5A Deluge Valve, Preaction, Single Interlock, Double Interlock and Deluge Packages

### Double Interlock Preaction, Electric/Electric Actuation with Panel

| Description | Size | Compressor | Part No. | List Price |
|---|---|---|---|---|
| Red-E DV-5A - 1½" Double Interlock Preaction with Electric/Electric actuation, Galvanized trim, Control Panel | 1½" | 1/6Hp | **53011501A1** | $76,996.16 |
| Red-E DV-5A - 1½" Double Interlock Preaction with Electric/Electric actuation, Galvanized trim, Control Panel | | 1/3Hp | **53011501A2** | $75,512.46 |
| Red-E DV-5A - 1½" Double Interlock Preaction with Electric/Electric actuation, Galvanized trim, Control Panel | | 1/2Hp | **53011501A3** | $76,990.13 |
| Red-E DV-5A - 2" Double Interlock Preaction with Electric/Electric actuation, Galvanized trim, Control Panel | 2" | 1/6Hp | **53021501A1** | $105,550.16 |
| Red-E DV-5A - 2" Double Interlock Preaction with Electric/Electric actuation, Galvanized trim, Control Panel | | 1/3Hp | **53021501A2** | $103,642.49 |
| Red-E DV-5A - 2" Double Interlock Preaction with Electric/Electric actuation, Galvanized trim, Control Panel | | 1/2Hp | **53021501A3** | $105,610.00 |
| Red-E DV-5A - 3" Double Interlock Preaction with Electric/Electric actuation, Galvanized trim, Control Panel | 3" | 1/6Hp | **53031501A1** | $98,101.82 |
| Red-E DV-5A - 3" Double Interlock Preaction with Electric/Electric actuation, Galvanized trim, Control Panel | | 1/3Hp | **53031501A2** | $96,197.87 |
| Red-E DV-5A - 3" Double Interlock Preaction with Electric/Electric actuation, Galvanized trim, Control Panel | | 1/2Hp | **53031501A3** | $98,029.32 |
| Red-E DV-5A - 4" Double Interlock Preaction with Electric/Electric actuation, Galvanized trim, Control Panel | 4" | 1/6Hp | **53041501A1** | $81,692.78 |
| Red-E DV-5A - 4" Double Interlock Preaction with Electric/Electric actuation, Galvanized trim, Control Panel | | 1/3Hp | **53041501A2** | $83,154.33 |
| Red-E DV-5A - 4" Double Interlock Preaction with Electric/Electric actuation, Galvanized trim, Control Panel | | 1/2Hp | **53041501A3** | $84,600.50 |
| Red-E DV-5A - 4" Double Interlock Preaction with Electric/Electric actuation, Galvanized trim, Control Panel | | 3/4Hp | **53041501A4** | $86,615.89 |
| Red-E DV-5A - 4" Double Interlock Preaction with Electric/Electric actuation, Galvanized trim, Control Panel | | 1Hp | **53041501A5** | $86,831.29 |
| Red-E DV-5A - 4" Double Interlock Preaction with Electric/Electric actuation, Galvanized trim, Control Panel | | 1-1/2Hp | **53041501A6** | $92,000.54 |
| Red-E DV-5A - 4" Double Interlock Preaction with Electric/Electric actuation, Galvanized trim, Control Panel | | 2Hp | **53041501A7** | $93,415.94 |
| Red-E DV-5A - 6" Double Interlock Preaction with Electric/Electric actuation, Galvanized trim, Control Panel | 6" | 1/6Hp | **53061501A1** | $102,287.81 |
| Red-E DV-5A - 6" Double Interlock Preaction with Electric/Electric actuation, Galvanized trim, Control Panel | | 1/3Hp | **53061501A2** | $103,989.06 |
| Red-E DV-5A - 6" Double Interlock Preaction with Electric/Electric actuation, Galvanized trim, Control Panel | | 1/2Hp | **53061501A3** | $105,690.32 |
| Red-E DV-5A - 6" Double Interlock Preaction with Electric/Electric actuation, Galvanized trim, Control Panel | | 3/4Hp | **53061501A4** | $108,082.70 |
| Red-E DV-5A - 6" Double Interlock Preaction with Electric/Electric actuation, Galvanized trim, Control Panel | | 1Hp | **53061501A5** | $110,018.08 |
| Red-E DV-5A - 6" Double Interlock Preaction with Electric/Electric actuation, Galvanized trim, Control Panel | | 1-1/2Hp | **53061501A6** | $116,336.20 |
| Red-E DV-5A - 6" Double Interlock Preaction with Electric/Electric actuation, Galvanized trim, Control Panel | | 2Hp | **53061501A7** | $117,956.23 |

**Technical Data Sheets: Deluge - TFP1301, Preaction - TFP1401**



*Refer to the latest technical data sheets for specific approvals, listings, design parameters, and available options on www.tyco-fire.com.*

Section 8 Wet System Valves
Section 9 Water Motor Alarms
Section 10 Dry Pipe Valves
Section 11 Quick Opening Devices
Section 12 Air Maintenance Devices
Section 13 Deluge Valves & Accessories
Section 14 Preaction Systems
Section 15 General Purpose Valves

## Quell Product Offerings

| *Description* | *Part No.* | *List Price* |
|---|---|---|
| 8" Groove X Groove, Pre-trimmed DV5 Preaction Double Interlock Electric/Electric, AC, with QRS Switch | **551011580Q** | $76,084.21 |
| 6" Groove X Groove, Pre-trimmed DV5 Preaction Double Interlock Electric/Electric, AC, with QUELL Switch | **551011560Q** | $62,459.64 |
| RED-E CABINET 8" Double Interlock, Preaction, with QRS Switch | **53081511A0Q** | $156,090.31 |
| RED-E CABINET 6" Double Interlock, Preaction, with QRS Switch | **53061511A0Q** | $127,242.24 |

*Refer to the latest technical data sheets for specific approvals, listings, design parameters, and available options on www.tyco-fire.com.*

## CV-1F Grooved Check Valve

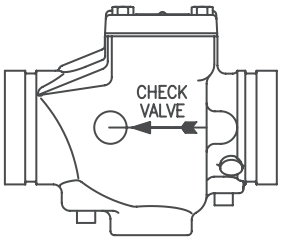


| Part Numbers CV-1F | Description | Price |
|---|---|---|
| 59-590-0-020 | 2" Grooved Check Valve | $696.95 |
| 59-590-0-025 | 2 1/2" Grooved Check Valve | $696.95 |
| 59-590-0-030 | 3" Grooved Check Valve | $696.95 |
| 59-590-0-040 | 4" Grooved Check Valve | $913.49 |
| 59-590-0-050 | 5" Grooved Check Valve | $1,632.58 |
| 59-590-0-060 | 6" Grooved Check Valve | $1,765.54 |
| 59-590-0-080 | 8" Grooved Check Valve | $2,754.26 |
| 59-590-0-100 | 10" Grooved Check Valve | $5,460.66 |
| 59-590-0-120 | 12" Grooved Check Valve | $13,142.42 |
| | **Replacement Parts for Model CV-1F Check Valve** | |
| 59-590-7-020 | 2" - Cover Gasket | $132.20 |
| 97670201A | 2" - Clapper Subassembly | $404.06 |
| 59020EPDM | 2" - Clapper Gasket | $225.28 |
| 59-590-7-030 | 2 1/2" - Cover Gasket | $264.97 |
| 97562801A | 2 1/2" - Clapper Subassembly | $550.28 |
| 59025EPDME | 2 1/2" - Clapper Gasket | $218.90 |
| 97561801E | 2 1/2" - 3" 76.1mm - Cover Gasket | POA |
| 59-590-7-030 | 3" - Cover Gasket | $264.97 |
| 97562201A | 3" - Clapper Subassembly | $601.67 |
| 59030EPDME | 3" - Clapper Gasket | $221.64 |
| 59-590-7-040 | 4" - Cover Gasket | $263.93 |
| 97549001A | 4" - Clapper Subassembly | $784.96 |
| 59040EPDME | 4" - Clapper Gasket | $218.95 |
| 59-590-7-040 | 5" - Cover Gasket | $263.93 |
| 97565501A | 5" - Clapper Subassembly | $855.67 |
| 59-590-7-060 | 6" - Cover Gasket | $257.97 |
| 97524101A | 6" - Clapper Subassembly | $1,127.14 |
| 59060EPDME | 6" - Clapper Gasket | $215.71 |
| 59-590-7-080 | 8" - Cover Gasket | $421.44 |
| 97592201A | 8" - Clapper Subassembly | $2,237.39 |
| 59080EPDME | 8" - Clapper Gasket | $374.77 |
| 59-590-7-100 | 10" - Cover Gasket | $429.54 |
| 97598001A | 10" - Clapper Subassembly | $2,891.18 |
| 59100EPDM | 10" - Clapper Gasket | $381.97 |
| 59-590-7-120 | 12" - Cover Gasket | $413.01 |
| 59120EPDM | 12" - Clapper Gasket | $367.28 |

**Technical Data Sheet: TFP1550**

## Model #CV-300B - Grooved End Swing Check Valve

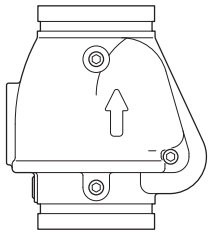

| Nom. Size | Part Numbers | List Price |
|---|---|---|
| 4" Grooved Check Valve | 595-300-040 | $728.78 |

**Technical Data Sheet - TFP1552**

*Refer to the latest technical data sheets for specific approvals, listings, design parameters, and available options on www.tyco-fire.com.*

Section 8 Wet System Valves
Section 9 Water Motor Alarms
Section 10 Dry Pipe Valves
Section 11 Quick Opening Devices
Section 12 Air Maintenance Devices
Section 13 Deluge Valves & Accessories
Section 14 Preaction Systems
Section 15 General Purpose Valves

## Model BFV-300 Butterfly Valves - 300 psi - Grooved
## Gear Operated w/ Tamper Switch, Tap Boss Int Switch Supervisory - OPEN

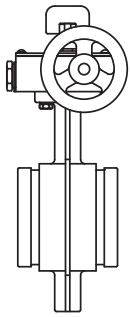

| Nom. Size | Part Numbers | List Price |
|---|---|---|
| 2" Model BFV-300 Butterfly Valve - OPEN - NO FM | **59300G020WSNF** | $929.37 |
| 2 1/2" Model BFV-300 Butterfly Valve - OPEN | **59300G025WS** | $887.61 |
| 3" Model BFV-300 Butterfly Valve - OPEN | **59300G030WS** | $1,076.06 |
| 4" Model BFV-300 Butterfly Valve - OPEN | **59300G040WS** | $1,155.95 |
| 5" Model BFV-300 Butterfly Valve - OPEN | **59300G050WS** | $2,415.72 |
| 6" Model BFV-300 Butterfly Valve - OPEN | **59300G060WS** | $1,506.41 |
| 8" Model BFV-300 Butterfly Valve - OPEN | **59300G080WS** | $1,563.67 |
| 10" Model BFV-300 Butterfly Valve - OPEN | **59300G100WS** | $4,088.13 |
| 12" Model BFV-300 Butterfly Valve - OPEN | **59300G120WS** | $7,283.72 |
| 12" Model BFV-300 Butterfly Valve - OPEN - NO FM | **59300G120WSNF** | $5,344.28 |
| **Technical Data Sheet - TFP1511** | | |

## Model BFV-300C Closed Butterfly Valves - 300 psi - Grooved
## Gear Operated w/ Tamper Switch, Tap Boss Int Switch Supervisory - CLOSED

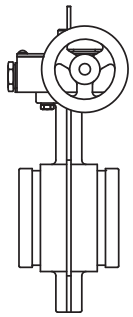

| Nom. Size | Part Numbers | List Price |
|---|---|---|
| 2" Model BFV-300 Butterfly Valve - CLOSED - NO FM | **59300G020WSCNF** | $2,980.15 |
| 2" Model BFV-300 Butterfly Valve - CLOSED | **59300G020WSC** | $876.38 |
| 2 1/2" BFV-300C Butterfly Valve - CLOSED | **59300G025WSC** | $1,595.02 |
| 3" BFV-300C Butterfly Valve - CLOSED | **59300G030WSC** | $1,100.60 |
| 4" BFV-300C Butterfly Valve - CLOSED | **59300G040WSC** | $1,249.57 |
| 5" BFV-300C Butterfly Valve - CLOSED | **59300G050WSC** | $2,537.85 |
| 6" BFV-300C Butterfly Valve - CLOSED | **59300G060WSC** | $1,670.61 |
| 8" BFV-300C Butterfly Valve - CLOSED | **59300G080WSC** | $2,277.62 |
| 10" BFV-300C Butterfly Valve - CLOSED | **59300G100WSC** | $8,176.89 |
| 12" Model BFV-300 Butterfly Valve - CLOSED - NO FM | **59300G120WSCNF** | $11,240.83 |
| **Technical Data Sheet - TFP1511** | | |

## Model BFV-300 Butterfly Valves - 300 psi - Grooved
## Without Internal Supervisory Switches

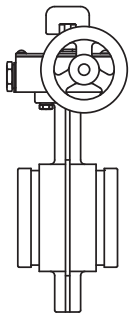

| Nom. Size | Part Numbers | List Price |
|---|---|---|
| 6" Model BFV-300 Butterfly Valve - NO | **59300G060NS** | POA |
| **Technical Data Sheet - TFP1511** | | |

*Refer to the latest technical data sheets for specific approvals, listings, design parameters, and available options on www.tyco-fire.com.*

## Model BFV-300 Butterfly Valves - 300 psi - Wafer Style with Internal Supervisory Switch

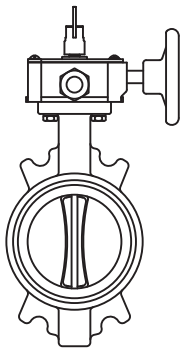

| Nom. Size | Part Numbers | List Price |
|---|---|---|
| 2" Model BFV-300 Butterfly Valve - WAFER - NO FM | **59300W020WSNF** | $4,471.38 |
| 2" Model BFV-300 Butterfly Valve - WAFER | **59300W020WS** | POA |
| 2½" BFV-300 Butterfly Valve - WAFER | **59300W025WS** | $1,955.59 |
| 3" BFV-300 Butterfly Valve - WAFER ANSI 16.5 ONLY | **59300W030WS** | $2,068.99 |
| 4" BFV-300 Butterfly Valve - WAFER | **59300W040WS** | $2,220.41 |
| 5" BFV-300 Butterfly Valve - WAFER | **59300W050WS** | $2,870.80 |
| 6" BFV-300 Butterfly Valve - WAFER | **59300W060WS** | $2,851.19 |
| 8" BFV-300 Butterfly Valve - WAFER ANSI 16.5 ONLY | **59300W080WS** | $4,260.71 |
| 10" BFV-300 Butterfly Valve - WAFER | **59300W100WS** | $5,706.65 |
| 12" Model BFV-300 Butterfly Valve - WAFER | **59300W120WS** | $10,404.99 |
| 12" Model BFV-300 Butterfly Valve - WAFER - NO FM | **59300W120WSNF** | $9,816.07 |
| **Technical Data Sheet - TFP1516** | | |

## Model BFV-300 Spare Parts

| Nom. Size | Part Numbers | List Price |
|---|---|---|
| 2½" - 4" BFV-300 Actuator Nut - Incl Handwheel Switch | **59300SPTRAVNUT10** | $942.56 |
| 5" - 6" BFV-300 Actuator Nut - Incl Handwheel Switch | **59300SPTRAVNUT20** | $1,219.67 |
| 8" BFV-300 Actuator Segm Gears - Incl Handwheel Switch | **59300SPTRAVNUT30** | $1,643.70 |
| 10" BFV-300 Actuator Gears - Incl Handwheel Switch | **59300SPTRAVNUT40** | $2,300.79 |
| 2½" - 4" BFV-300 Handwheel - Incl Handwheel And Pin | **59300SPHWHEEL10** | $174.24 |
| 5" - 6" BFV-300 Handwheel - Incl Handwheel And Pin | **59300SPHWHEEL20** | $198.41 |
| 8" BFV-300 225 Handwheel - Incl Handwheel And Pin | **59300SPHWHEEL30** | $292.84 |
| 10" BFV-300 Handwheel - Incl Handwheel And Pin | **59300SPHWHEEL40** | $330.65 |
| BFV-300 Bracket 2"-4" | **59300SPBRACKET10** | POA |
| BFV-300 Bracket 5"-6" (DN125-1 | **59300SPBRACKET20** | $110.01 |
| BFV-300 Bracket 8" (DN200) EX | **59300SPBRACKET25** | POA |
| BFV-300 Bracket 10-12" (DN250 | **59300SPBRACKET30** | POA |
| BFV-300 Flag 2“, 21/2“, 3“ and | **59300SPFLAG10** | $18.76 |
| BFV-300 Flag 5" and 6" | **59300SPFLAG20** | $21.98 |
| BFV-300 Flag 8',10“ and 12“ | **59300SPFLAG30** | POA |
| BFV-300 Switch GC ATEX | **59300SPSWATEX** | POA |
| BFV-300 Switch EXT I88 LED | **59300SPSWLED** | POA |
| **Technical Data Sheets - TFP1511 & TFP1516** | | |



*Refer to the latest technical data sheets for specific approvals, listings, design parameters, and available options on www.tyco-fire.com.*

Section 8 Wet System Valves
Section 9 Water Motor Alarms
Section 10 Dry Pipe Valves
Section 11 Quick Opening Devices
Section 12 Air Maintenance Devices
Section 13 Deluge Valves & Accessories
Section 14 Preaction Systems
Section 15 General Purpose Valves

## TJR Series - O.S.&Y. Gate Valves Flange x Flange
## UL & C-UL Listed and FM Approved

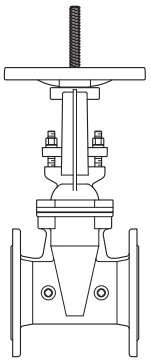

| Nom. Size | Part Numbers | List Price |
|---|---|---|
| 2" | **TJRX0500003** | $1,542.83 |
| 2 1/2" | **TJRX0650003** | $2,056.98 |
| 3" | **TJRX0800003** | $2,448.67 |
| 4" | **TJRX1000003** | $2,199.41 |
| 4" | **TJRX1000003T** | POA |
| 6" | **TJRX1500003** | $3,485.08 |
| 6" | **TJRX1500003T** | POA |
| 8" | **TJRX2000003** | $5,618.77 |
| 8" | **TJRX2000003T** | POA |
| 10" | **TJRX2500003** | $7,259.39 |
| 12" | **TJRX3000003** | $15,002.36 |
| 14" | **TJRX3500003** | $61,545.16 |
| 16" | **TJRX4000003** | $65,918.93 |
| **Technical Data Sheet - TFP1541** | | |

## TJR Series - O.S.&Y. Gate Valves Groove x Groove
## UL & C-UL Listed and FM Approved

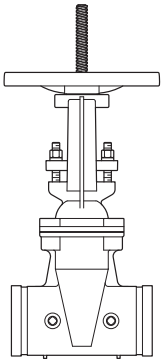

| Nom. Size | Part Numbers | List Price |
|---|---|---|
| 2" | **TJRG0500604** | $1,964.90 |
| 2 1/2" | **TJRG0650734** | $2,056.98 |
| 76,1mm (2 1/2") | **TJRG0650764** | $1,858.02 |
| 3" | **TJRG0800894** | $2,448.67 |
| 4" | **TJRG1001144** | $2,688.52 |
| 4" | **TJRG1001144T** | POA |
| 165,1mm (6") | **TJRG1501654** | $2,102.71 |
| 6" | **TJRG1501684** | $3,699.14 |
| 8" | **TJRG2002194** | $6,133.92 |
| 10" | **TJRG2502734** | $5,131.31 |
| 12" | **TJRG3003244** | $18,022.84 |
| 14" | **TJRG3503564** | $73,936.27 |
| 16" | **TJRG4004064** | $79,546.17 |
| **Technical Data Sheet - TFP1541** | | |

*Refer to the latest technical data sheets for specific approvals, listings, design parameters, and available options on www.tyco-fire.com.*

## TJP Series - N.R.S. Gate Valves - F x F, PIV
## UL & C-UL Listed and FM Approved

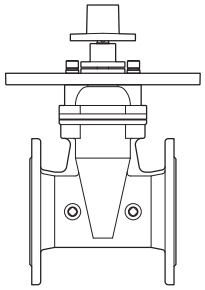

| Nom. Size | Part Numbers | List Price |
|---|---|---|
| 2" | TJPX0500003 | $1,968.22 |
| 3" | TJPX0800003 | $2,193.49 |
| 4" | TJPX1000003 | $2,371.06 |
| 6" | TJPX1500003 | $3,574.58 |
| 8" | TJPX2000003 | $7,756.05 |
| 10" | TJPX2500003 | $10,032.32 |
| 12" | TJPX3000003 | $16,561.35 |
| 14" | TJPX3500003 | $65,237.99 |
| 16" | TJPX4000003 | $69,874.20 |
| 18" | TJPX4500003 | $154,545.88 |
| 20" | TJPX5000003 | $229,596.58 |
| 24" | TJPX6000003 | $346,442.82 |
| Technical Data Sheet - TFP1546 | | |

## TJP Series - N.R.S. Gate Valves - G x G, PIV
## UL & C-UL Listed and FM Approved

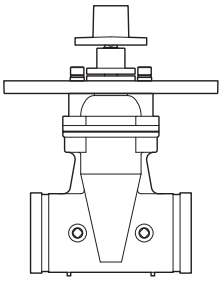

| Nom. Size | Part Numbers | List Price |
|---|---|---|
| 2" | TJPG0500604 | $2,195.68 |
| 4" | TJPG1001144 | $2,286.44 |
| 6" | TJPG1501684 | $3,198.41 |
| 8" | TJPG2002194 | $6,968.43 |
| 10" | TJPG2502734 | $8,662.46 |
| 12" | TJPXG003244 | POA |
| Technical Data Sheet - TFP1546 | | |



*Refer to the latest technical data sheets for specific approvals, listings, design parameters, and available options on www.tyco-fire.com.*

Section 8 Wet System Valves
Section 9 Water Motor Alarms
Section 10 Dry Pipe Valves
Section 11 Quick Opening Devices
Section 12 Air Maintenance Devices
Section 13 Deluge Valves & Accessories
Section 14 Preaction Systems
Section 15 General Purpose Valves

## Wall Indicators for TJP Series N.R.S. Gate Valves
## UL Listed and FM Approved

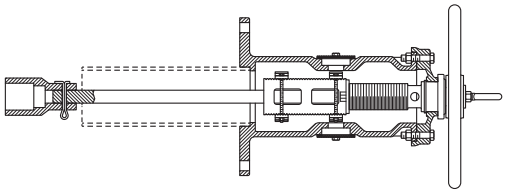

| Nom. Size | Part Numbers | List Price |
|---|---|---|
| WALL INDICATOR | **TJWP** | $2,722.71 |

**Technical Data Sheet - TFP1546**

## Post Indicators for TJP Series N.R.S. Gate Valves
## UL Listed and FM Approved

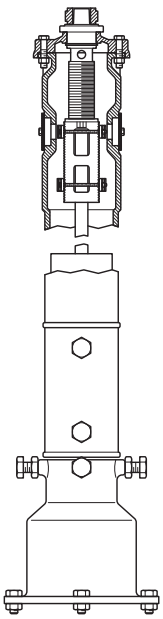

| Nom. Size | Part Numbers | List Price |
|---|---|---|
| Post Indicator A for TJP 3" - 12" | **TJUPA** | $4,189.89 |
| Post Indicator B for TJP 14" – 24" | **TJUPB** | $4,990.39 |
| **Replacement Parts** | | |
| Mounting Flange TJUPB 2"-12" | **TJUPBFLANGE** | POA |
| Wrench for Post indicator TJUP | **TJUPWRENCH** | $598.16 |
| (D) Post indicator A 403-1043 for TMP | **TMUPA** | POA |

**Technical Data Sheet - TFP1546**

*Refer to the latest technical data sheets for specific approvals, listings, design parameters, and available options on www.tyco-fire.com.*

## Model PRV-1A Pressure Regulating Valve
## Globe Style, 300 psi, 2" thru 8"

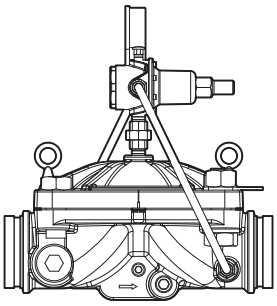

| *Groove x Groove - Description* | *Part Numbers* | *List Price* |
|---|---|---|
| 2" Model PRV-1A Pressure Regulating Valve, Groove x Groove | **550012020** | $7,235.88 |
| 3" Model PRV-1A Pressure Regulating Valve, Groove x Groove | **550012030** | $8,204.58 |
| 4" Model PRV-1A Pressure Regulating Valve, Groove x Groove | **550012040** | $11,551.00 |
| 6" Model PRV-1A Pressure Regulating Valve, Groove x Groove | **550012060** | $18,598.07 |
| 8" Model PRV-1A Pressure Regulating Valve, Groove x Groove | **550012080** | $23,242.74 |

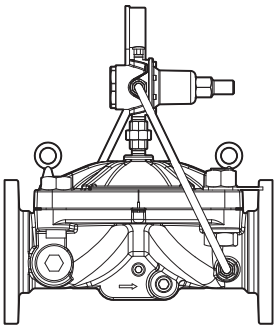

| *Flange x Flange - Description* | *Part Numbers* | *List Price* |
|---|---|---|
| 3" Model PRV-1A Pressure Regulating Valve, Flange x Flange | **550022030** | $9,543.07 |
| 4" Model PRV-1A Pressure Regulating Valve, Flange x Flange | **550022040** | $12,150.14 |
| 6" Model PRV-1A Pressure Regulating Valve, Flange x Flange | **550022060** | $14,367.65 |
| 8" Model PRV-1A Pressure Regulating Valve, Flange x Flange | **550022080** | $26,527.61 |

**Technical Data Sheet - TFP1581**



*Refer to the latest technical data sheets for specific approvals, listings, design parameters, and available options on www.tyco-fire.com.*

Section 8 Wet System Valves
Section 9 Water Motor Alarms
Section 10 Dry Pipe Valves
Section 11 Quick Opening Devices
Section 12 Air Maintenance Devices
Section 13 Deluge Valves & Accessories
Section 14 Preaction Systems
Section 15 General Purpose Valves

## Model RV-1A Pressure Relief Valves
## Globe Style, 300 psi, 2" thru 8"

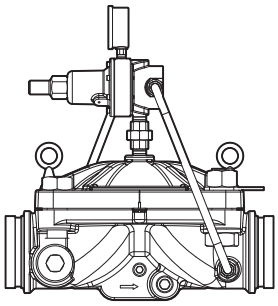

| *Groove x Groove Description* | *Part Numbers* | *List Price* |
|---|---|---|
| 2" Model RV-1A Relief Valve, Groove x Groove | **550013020** | $6,854.01 |
| 3" Model RV-1A Relief Valve, Groove x Groove | **550013030** | $9,270.98 |
| 4" Model RV-1A Relief Valve, Groove x Groove | **550013040** | $11,153.14 |
| 6" Model RV-1A Relief Valve, Groove x Groove | **550013060** | $18,691.06 |
| 8" Model RV-1A Relief Valve, Groove x Groove | **550013080** | $25,697.87 |

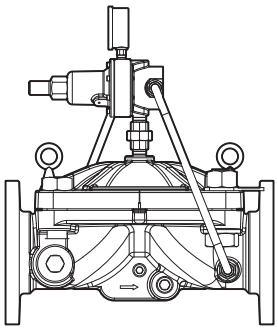

| *Flange x Flange Description* | *Part Numbers* | *List Price* |
|---|---|---|
| 3" Model RV-1A Relief Valve, Flange x Flange | **550023030** | $9,355.93 |
| 4" Model RV-1A Relief Valve, Flange x Flange | **550023040** | $11,462.42 |
| 6" Model RV-1A Relief Valve, Flange x Flange | **550023060** | $19,639.92 |
| 8" Model RV-1A Relief Valve, Flange x Flange | **550023080** | $26,527.61 |

### Replacement Parts

| *Description* | *Part Numbers* | *List Price* |
|---|---|---|
| 2" DV-5A Deluge Replacement Diaphragm | **545000020** | $2,892.56 |
| 3" DV-5A Deluge Replacement Diaphragm | **545000030** | $2,967.42 |
| 4" DV-5A Deluge Replacement Diaphragm | **545000040** | $7,819.56 |
| 6" DV-5A Deluge Replacement Diaphragm | **545000060** | $11,666.68 |
| 8" DV-5A Deluge Replacement Diaphragm | **545000080** | $22,252.50 |
| P1 Pilot Valve 2" thru 6" - 0.125 in. Restriction | **545100068** | $5,893.81 |
| P1 Pilot Valve 8" - 0.250 in. Restriction | **545100101** | $5,893.81 |
| R1 Pilot Valve 2" thru 8" | **545100069** | $5,893.81 |
| Flare Fitting 1/4 in. Gauge Adapter 1/2 in. NPT X 1/2 in. Tube | **545100072** | $338.33 |
| Flare Fitting Strainer 1/2" NPT X 1/2" Tube | **545100073** | $197.36 |
| 2" Tubing Assembly, DV-5A p1 Interconnect Tube 1 - 2" Valve | **545100074** | $84.58 |
| 3" Tubing Assembly, DV-5A p1 Interconnect Tube 1 - 3" Valve | **545100075** | $71.72 |
| 4" Tubing Assembly, DV-5A p1 Interconnect Tube 1 - 4" Valve | **545100076** | POA |
| 2" Tubing Assembly, DV-5A p1 Interconnect Tube 2 - 2" Valve | **545100079** | $84.58 |

**Technical Data Sheet - TFP1586**

*Refer to the latest technical data sheets for specific approvals, listings, design parameters, and available options on www.tyco-fire.com.*

## Valve System Accessories

| Description | Part No. | List Price |
|---|---|---|
| 1/2" Pressure Relief Valve | **2283** | $758.36 |
| 1/4" Pressure Relief Valve | **92-343-1-125** | $516.89 |
| 1/4" Pressure Relief Valve | **92-343-1-126** | $138.35 |
| 3/8" Furnas Pressure Switch | **2433** | $1,168.64 |

## F1321 Sight Flow Connection

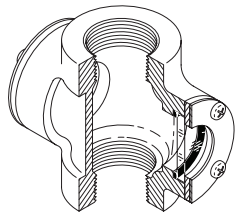

| Description | Part No. | List Price |
|---|---|---|
| 1" F1321 Sight Flow Connection | **52-069-1-006** | $471.84 |
| 2" F1321 Sight Flow Connection | **52-069-1-009** | $1,181.42 |

**Technical Data Sheet - TFP1635**

## Ball Drip Valves

| Description | Part Number | List Price |
|---|---|---|
| 1/2" Ball Drip w/street ell | **2282** | $178.61 |
| 1/2" AD-2 Automatic Drain Ball Drip (for FDC & Low Point Drains) | **52-789-1-004** | $275.95 |
| 1/2" AD-1 Plunger Type, Automatic Drain Ball Drip | **52-793-2-004** | $512.69 |
| 1/2" AD-1 Plunger Type, Automatic Drain Ball Drip SS | **52-793-4-004** | $357.12 |

**Technical Data Sheet - AD-1 TFP1630 & AD-2 TFP1632**

## Fill or Drip Cups

| Description | Part No. | List Price |
|---|---|---|
| 1/2" N.P.T. | **1295** | $408.61 |
| 3/4" N.P.T. | **129501** | $408.61 |

## DD-1 (Drum Drip) Wiliag Drain

| Description | Part No. | List Price |
|---|---|---|
| **DD-1 (Drum Drip) Wiliag Drain**<br>Includes: Condensation Barrel, 2- 1" Shutoff Valves & 1-1" Plug | **52-380-1-002** | $553.04 |



*Refer to the latest technical data sheets for specific approvals, listings, design parameters, and available options on www.tyco-fire.com.*

## Manual Control Stations

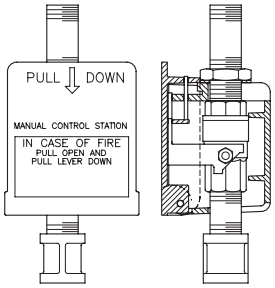


| Description | Part No. | List Price |
|---|---|---|
| Manual Control Station, Model MC-2 | **54-500-2-000** | $1,762.69 |
| Replacement Rod $^{1}/_{8}$" x 1-$^{3}/_{16}$" Polystyrene | **92-289-1-008** | $78.29 |

**Technical Data Sheet - TFP1382**

## Model G16AC812 Automatic Supervisory Air Supply

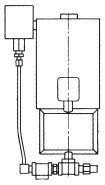

| Description | Part No. | List Price |
|---|---|---|
| Automatic Air Supply Model G16AC812 | **52-150-1-001** | $14,827.92 |
| Universal Bracket Riser Mount | **52-150-1-000** | $1,084.85 |

**Technical Data Sheet - TFP1620**

## Water and Air Gauges

| Description | Part No. | List Price |
|---|---|---|
| Water Pressure Gauge. | **92-343-1-005** | $306.72 |
| Air Pressure Gauge. 250 psi | **92-343-1-012** | $299.36 |
| Air/Water Pressure Gauge. 0 - 300 psi, $^{1}/_{4}$" NPT | **92-343-1-013** | $299.36 |

## Fusible Links/Fire Door Links, Type C

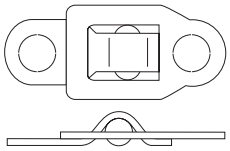

| Description | Part Number | List Price |
|---|---|---|
| Fusible Link, Figure 1247B 165°F (74°C), Type C | **56-125-9-165** | $77.90 |
| Fusible Link, Figure 1247B 212°F (100°C), Type C | **56-125-9-212** | $77.90 |
| Fusible Link, Figure 1247B 286°F (141°C), Type C | **56-125-9-286** | $77.90 |
| Fusible Link, Figure 1247B 360°F (182°C), Type C | **56-125-9-360** | $77.90 |
| Fusible Link, Figure 1247B 500°F (260°C), Type C | **56-125-9-500** | $77.90 |

**Technical Data Sheet - TFP1610**

*Refer to the latest technical data sheets for specific approvals, listings, design parameters, and available options on www.tyco-fire.com.*

## Sprinkler Identification Signs

| Description | Part No. | List Price |
|---|---|---|
| Sign B "Air Line", 6" x 2" | **23489** | $4.42 |
| Sign B "Alarm Test", 6" x 2" | **23491** | $3.69 |
| Sign B "Auxiliary Drain", 6" x 2" | **23493** | $3.69 |
| Sign B "Control Valve", 6" x 2" | **23494** | $3.69 |
| Sign B "Drain", 6" x 2" | **23495** | $3.69 |
| Sign B "Inspectors Test", 6" x 2" | **23496** | $3.69 |
| Sign B " In This Building", 6" x 2" | **2314** | $4.20 |
| Sign B "Main Control", 6" x 2" | **23500** | $3.69 |
| Sign B "Main Drain", 6" x 2" | **23501** | $4.42 |
| Sign B "Test Valve", 6" x 2" | **2324** | $4.20 |
| Sign B "Drain Valve", 6" x 2" | **23502** | $4.20 |
| Sign B "Alarm Test" 6" x 2" | **2304A** | $4.20 |
| Sign E - Hydraulic Calculations, 5" x 7" | **23498** | $31.75 |
| Sign Chain - (by the box) 100' roll | **23507** | $366.52 |

**Technical Data Sheet - TFP1615**

## Restriction Unions

| Description | Part No. | List Price |
|---|---|---|
| 1/2" Brass Union 1/8" Orifice. | **52-363-1-001** | $851.78 |
| 1/2" Brass Union 3/32" Orifice. | **52-363-1-002** | $372.07 |



*Refer to the latest technical data sheets for specific approvals, listings, design parameters, and available options on www.tyco-fire.com.*

## LFP™ Antifreeze, Minimum Use Temperature -10 °F (-23 °C)

| Description | Part No. | List Price |
|---|---|---|
| LFP™ Antifreeze 5 Gallon (19L) Pails - 36 per Pallet | **54028** | $16,578.95 |
| LFP™ Antifreeze 30 Gallon (114L) Drums - 5 per Pallet | **54029** | $13,421.05 |
| LFP™ Antifreeze 1 (IBC) Tote 250 Gallon (965L) | **54036** | $21,710.53 |

**Notes**

Special pricing classification for antifreeze, current customer discount structures do not apply to this product

**Note:** Minimum order quantity is 1 pallet of 36 pails or 5 drums. Smaller quantities may be purchased through a Johnson Controls authorized distributor.

**Technical Data Sheet - TFP1680**

## LFP™ Antifreeze+, Minimum Use Temperature -25 °F (-32 °C)

| Description | Part No. | List Price |
|---|---|---|
| LFP™ Antifreeze+ 5 Gallon (19L) Pails - 36 per Pallet | **54033** | $44,809.89 |
| LFP™ Antifreeze+ 30 Gallon (114L) Drums - 5 per Pallet | **54034** | $41,343.58 |
| LFP™ Antifreeze+ 1 (IBC) Tote 250 Gallon (965L) | **54035** | $41,101.11 |

**Notes**

Special pricing classification for antifreeze, current customer discount structures do not apply to this product

**Note:** Minimum order quantity is 1 pallet of 36 pails or 5 drums. Smaller quantities may be purchased through a Johnson Controls authorized distributor.

**Technical Data Sheet - TFP1682**

*Refer to the latest technical data sheets for specific approvals, listings, design parameters, and available options on www.tyco-fire.com.*

## G-FIRE #579 – Rigid Coupling with Grade "A" EPDMA Center-Stop, Push-On Pre-Lubricated Gasket

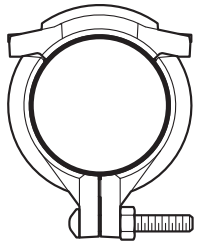

| Nom. Size | Painted | | Galvanized | |
|---|---|---|---|---|
| | Part Number | List Price | Part Number | List Price |
| 1 1/4" | **57913AP** | $63.91 | **57913AGP** | $116.77 |
| 1 1/2" | **57915AP** | $65.48 | **57915AGP** | $114.20 |
| 2" | **579A20AP** | $66.32 | **579A20AGP** | $125.55 |
| 2 1/2" | **579A25AP** | $76.02 | **579A25AGP** | $137.56 |
| 3" | **579A30AP** | $83.81 | **579A30AGP** | $175.05 |
| 4" | **579A40AP** | $119.17 | **579A40AGP** | $217.72 |
| 6" | **579A60AP** | $283.63 | **579A60AGP** | $614.93 |
| 8" | **579A80AP** | $397.45 | **579A80AGP** | $794.89 |

**Technical Data Sheet: TFP1856**

## Replacement Grade "A" EPDMA Center-Stop, Push-On Pre-Lubricated Gasket for #579 Rigid Coupling

| Nom. Size | Part Number | List Price |
|---|---|---|
| 1 1/4" | **13EPDMAP** | $325.69 |
| 1 1/2" | **15EPDMAP** | $141.58 |
| 2" | **20AEPDMAP** | $193.66 |
| 2 1/2" | **25AEPDMAP** | $260.98 |
| 3" | **30AEPDMAP** | $754.98 |
| 4" | **40AEPDMAP** | $861.18 |
| 6" | **60AEPDMAP** | $359.84 |
| 8" | **80AEPDMAP** | $603.81 |

Orders for items in shaded areas ***cannot*** be cancelled or returned.

**Technical Data Sheet: TFP1895**

## Coupling Nut and Bolt Kit for #579 Rigid Coupling

| Nominal Size | Qty/Kit | Carbon Steel | |
|---|---|---|---|
| | | Part Number | List Price |
| 3/8" x 2 1/2" | 1 | **NB37250** | $29.02 |
| 3/8" x 2 3/4" | 1 | **NB37275** | $36.64 |
| 1/2" x 3 1/2" | 1 | **NB50350** | $54.24 |
| 5/8" x 4 1/8" | 1 | **NB62412** | $72.32 |

Orders for items in shaded areas ***cannot*** be cancelled or returned.

**Technical Data Sheet: TFP1856**

Section 16 Specialty Items
Section 18 Grooved Product
Section 20 Miscellaneous
Section 21 Electrical
Section 22 Corrosion Solutions
Section C Valves & Hose Equipment
Section D Backflow
Section F Pipe & Accessories
Section J Lubricants
Section K Misc.

## G-FIRE #577 – Rigid Coupling with Grade "A" EPDMA Fire Protection Pre-Lubricated Gasket

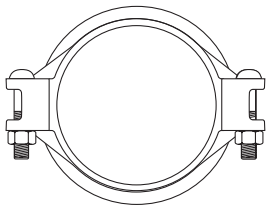

| Nom. Size | Painted | | Galvanized | |
|---|---|---|---|---|
| | Part Number | List Price | Part Number | List Price |
| 1" | **57701ASC** | $211.03 | **57701AGSC** | $142.57 |
| 1 1/4" | **57713ACP** | $40.60 | **57713AGCP** | $124.81 |
| 1 1/2" | **57715ACP** | $42.12 | **57715AGCP** | $100.30 |
| 2" | **57720ACP** | $44.28 | **57720AGCP** | $164.13 |
| 2 1/2" | **57725ACP** | $46.72 | **57725AGCP** | $158.22 |
| 3" | **57730ACP** | $56.65 | **57730AGCP** | $151.62 |
| 4" | **57740ACP** | $86.44 | **57740AGCP** | $278.82 |
| 5" | **57750ACP** | $282.96 | **57750AGCP** | $365.57 |
| 6" | **57760ACP** | $138.49 | **57760AGCP** | $472.50 |
| 8" | **57780ACP** | $219.24 | **57780AGCP** | $464.78 |
| 10" | **57710ACP** | $798.14 | **57710AGCP** | $1,650.76 |
| 12" | **57712ACP** | $1,518.66 | **57712AGCP** | $2,037.52 |

**Technical Data Sheet: TFP1854**

## G-FIRE #577 – Rigid Tri-Seal Coupling with Grade "E" EPDM Tri-Seal Gasket Recommended for Dry Pipe Systems and Freezer Applications – Use Silicone Lubricant

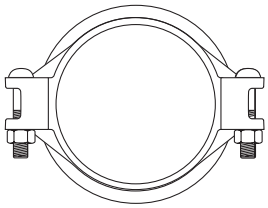

| Nom. Size | Painted | | Galvanized | |
|---|---|---|---|---|
| | Part Number | List Price | Part Number | List Price |
| 1" | **57701E3S** | $339.31 | **57701E3GS** | $354.84 |
| 1 1/4" | **57713E3S** | $89.37 | **57713E3GS** | $107.18 |
| 1 1/2" | **57715E3S** | $101.32 | **57715E3GS** | $112.91 |
| 2" | **57720E3S** | $71.81 | **57720E3GS** | $146.68 |
| 2 1/2" | **57725E3S** | $159.64 | **57725E3GS** | $147.50 |
| 3" | **57730E3S** | $101.22 | **57730E3GS** | $174.49 |
| 4" | **57740E3S** | $96.36 | **57740E3GS** | $248.21 |
| 5" | **57750E3S** | $608.10 | **57750E3GS** | $591.62 |
| 6" | **57760E3S** | $247.80 | **57760E3GS** | $774.04 |
| 8" | **57780E3S** | $941.38 | **57780E3GS** | $702.37 |
| 10" | **57710E3S** | $2,663.74 | **57710E3GS** | $1,884.99 |
| 12" | **57712E3S** | $1,863.45 | **57712E3GS** | $2,326.52 |

**Technical Data Sheet: TFP1854**

*See latest catalog or technical data sheets for specific approvals, listings, and design parameters.*
*POA = Price on availability. Prices subject to change without notice.*

## #705 – Flexible Coupling with Grade "A" EPDMA Fire Protection Pre-Lubricated Gasket

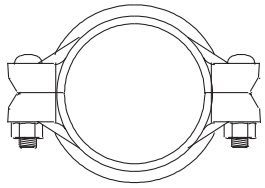

| Nom. Size | Painted | | Galvanized | |
|---|---|---|---|---|
| | Part Number | List Price | Part Number | List Price |
| 1" | 70501ACP | $95.39 | 70501AGCP | $119.24 |
| 1 1/4" | 70513ACP | $58.33 | 70513AGCP | $75.74 |
| 1 1/2" | 70515ACP | $46.28 | 70515AGCP | $144.64 |
| 2" | 70520ACP | $52.24 | 70520AGCP | $192.30 |
| 2 1/2" | 70525ACP | $63.61 | 70525AGCP | $233.99 |
| 3" | 70530ACP | $85.38 | 70530AGCP | $262.09 |
| 4" | 70540ACP | $95.28 | 70540AGCP | $372.35 |
| 5" | 70550ACP | $563.69 | 70550AGCP | $808.00 |
| 6" | 70560ACP | $173.18 | 70560AGCP | $672.47 |
| 8" | 70580ACP | $249.98 | 70580AGCP | $1,181.36 |
| 10" | 70510ACP | $1,223.84 | 70510AGCP | $2,782.46 |
| 12" | 70512ACP | $1,437.19 | 70512AGCP | $2,056.21 |

Orders for items in shaded areas ***cannot*** be cancelled or returned.

**Technical Data Sheet: TFP1820**

## #705 – Flexible Tri-Seal Coupling with Grade "E" EPDM Tri-Seal Gasket Recommended for Dry Pipe Systems and Freezer Applications – Use Silicone Lubricant

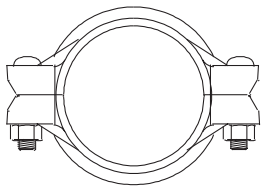

| Nom. Size | Painted | | Galvanized | |
|---|---|---|---|---|
| | Part Number | List Price | Part Number | List Price |
| 1 1/4" | 70513E3S | $94.31 | 70513E3GS | $112.30 |
| 1 1/2" | 70515E3S | $449.75 | 70515E3GS | $535.89 |
| 2" | 70520E3S | $611.95 | 70520E3GS | $551.09 |
| 2 1/2" | -- | – | 70525E3GS | $250.60 |
| 3" | 70530E3S | $159.61 | 70530E3GS | $258.89 |
| 4" | 70540E3S | $526.73 | 70540E3GS | $712.12 |
| 5" | 70550E3S | $758.18 | 70550E3GS | $902.17 |
| 6" | 70560E3S | $209.64 | 70560E3GS | $609.84 |
| 8" | 70580E3S | $365.04 | 70580E3GS | $1,225.61 |
| 10" | 70510E3S | $2,304.40 | 70510E3GS | $3,096.15 |
| 12" | 70512E3S | $1,760.92 | 70512E3GS | $2,316.17 |

Orders for items in shaded areas ***cannot*** be cancelled or returned.

**Technical Data Sheet: TFP1820**

## #707 Heavy-Duty Flexible Coupling with Grade "E" EPDM Gasket

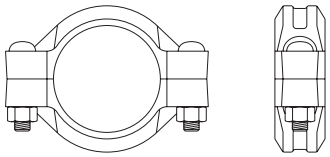

| Nominal Size | Painted | |
|---|---|---|
| | Part Number | List Price |
| 1" | **70701ES** | $34.94 |
| 1½" | **70715ES** | $49.76 |
| 2" | **70720ES** | $147.45 |
| 2½" | **70725ES** | $167.74 |
| 3" | **70730ES** | $290.99 |
| 4" | **70740ES** | $343.58 |
| 6" | **70760ES** | $1,116.54 |

**Technical Data Sheet: TFP1840**

## #716 – Reducing Coupling with Grade "E" EPDM Non-Lubricated Gasket

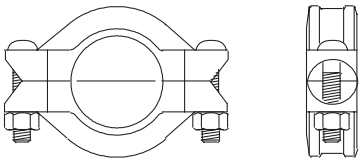

| Nom. Size | Painted | | Galvanized | |
|---|---|---|---|---|
| | Part Number | List Price | Part Number | List Price |
| 2" x 1½" | **7162015ES** | $218.69 | **7162015EGS** | $203.82 |
| 2½" x 2" | **7162520ES** | $241.37 | -- | – |
| 3" x 2" | **7163020ES** | $280.38 | -- | – |
| 3" x 2½" | **7163025ES** | $235.26 | **7163025EGS** | $365.79 |
| 4" x 2" | **7164020ES** | $442.94 | -- | – |
| 4" x 2½" | **7164025ES** | $404.76 | **7164025EGS** | $525.82 |
| 4" x 3" | **7164030ES** | $372.43 | **7164030EGS** | $647.83 |
| 5" x 4" | **7165040ES** | $691.46 | -- | – |
| 6" x 4" | **7166040ES** | $788.63 | **7166040EGS** | $1,116.06 |
| 6" x 5" | **7166050ES** | $828.64 | -- | – |
| 8" x 6" | **7168060ES** | $1,150.08 | **7168060EGS** | $1,786.66 |

**Technical Data Sheet: TFP1830**

## #716 Reducing Coupling Plate

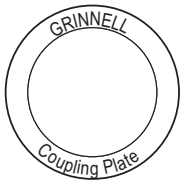


| Nom. Size | Part Number | List Price |
|---|---|---|
| 4" x 2½" | **7164025W** | $152.54 |
| 4" x 3" | **7164030W** | $134.05 |

Orders for items in shaded areas ***cannot*** be cancelled or returned.

*See latest catalog or technical data sheets for specific approvals, listings, and design parameters.*
*POA = Price on availability. Prices subject to change without notice.*

## Replacement Gaskets, Grade "E" EPDM Gasket for #716 Reducing Coupling

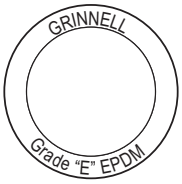


| Nom. Size | Part Number | List Price |
|---|---|---|
| 4" x 3" | **4030EPDME** | $484.99 |

Orders for items in shaded areas ***cannot*** be cancelled or returned.

**Technical Data Sheet: TFP1895**

## #71 – Grooved Flange Adapter with Grade "E" EPDM Non-Lubricated Gasket

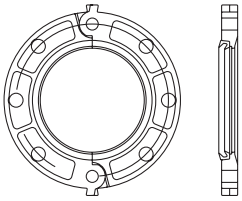

| Nom. Size | Painted | | Galvanized | |
|---|---|---|---|---|
| | Part Number | List Price | Part Number | List Price |
| 2" | **7120S** | $380.79 | **7120GS** | $928.85 |
| 2 1/2" | **7125S** | $436.21 | **7125GS** | $907.63 |
| 3" | **7130S** | $616.81 | **7130GS** | $1,178.73 |
| 4" | **7140S** | $631.79 | **7140GS** | $779.95 |
| 5" | **7150S** | $775.76 | **7150GS** | $921.09 |
| 6" | **7160S** | $818.70 | **7160GS** | $1,066.73 |
| 8" | **7180S** | $1,197.68 | **7180GS** | $2,257.45 |
| 10" | **7110S** | $2,343.75 | **7110GS** | $5,623.12 |
| 12" | **7112S** | $2,789.59 | **7112GS** | $7,869.83 |

Orders for items in shaded areas ***cannot*** be cancelled or returned.

**Technical Data Sheet: TFP1880**

## #71 Flange Adapter – Metal Washer

| Nom. Size | Part Number | List Price |
|---|---|---|
| 2" | **7120FWC** | $189.85 |
| 2 1/2" | **7125FWC** | $273.85 |
| 3" | **7130FWC** | $220.08 |
| 4" | **7140FWC** | $460.33 |
| 5" | **7150FWC** | $303.57 |
| 6" | **7160FWC** | $641.36 |
| 8" | **7180FWC** | $776.50 |
| 10" | **7110FWC** | $1,502.46 |
| 12" | **7112FWC** | $1,037.82 |

Orders for items in shaded areas ***cannot*** be cancelled or returned.

**Technical Data Sheet: TFP1895**

Section 16 Specialty Items
Section 18 Grooved Product
Section 20 Miscellaneous
Section 21 Electrical
Section 22 Corrosion Solutions
Section C Valves & Hose Equipment
Section D Backflow
Section F Pipe & Accessories
Section J Lubricants
Section K Misc.

## #71 Flange Adapter – Gaskets or Nut, Bolt, and Washer Gasket Kit

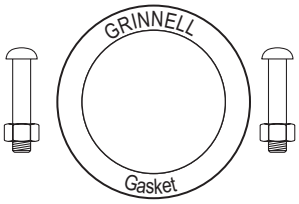


| Nom. Size | Gaskets | | Nut, Bolt and Washer Gasket Kit | |
|---|---|---|---|---|
| | Part Number | List Price | Part Number | List Price |
| 2 1/2" | 7125EPDME | $98.40 | 50241P | $198.26 |
| 3" | 7130EPDME | $71.97 | 50242P | $171.87 |
| 4" | 7140EPDME | $336.21 | 50243P | $268.81 |
| 5" | – | – | 50248P | $343.19 |
| 6" | 7160EPDME | $575.66 | 50244P | $295.54 |
| 8" | 7180EPDME | $244.72 | 50245P | $287.03 |
| 10" | 7110EPDME | $774.35 | 50246P | $1,020.68 |
| 12" | -- | – | 50247P | $1,045.53 |

Orders for items in shaded areas ***cannot*** be cancelled or returned.

**Technical Data Sheet: TFP1895**

## Replacement Gaskets

| Nominal Size | Tri-Seal Grade "E" EPDM Gasket (for #577, #705) | | Grade "E" EPDM Gasket (for #71) | |
|---|---|---|---|---|
| 2 1/2" | -- | – | 7125EPDME | $98.40 |
| 3" | -- | – | 7130EPDME | $71.97 |
| 4" | 40EPDME3 | $1,271.11 | 7140EPDME | $336.21 |
| 6" | -- | – | 7160EPDME | $575.66 |
| 8" | – | – | 7180EPDME | $244.72 |
| 10" | – | – | 7110EPDME | $774.35 |

Orders for items in shaded areas ***cannot*** be cancelled or returned.

**Technical Data Sheet: TFP1895**

## Coupling Nut and Bolt Kit

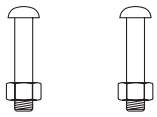

| Nominal Size | Qty/Kit | Carbon Steel | | Stainless Steel | |
|---|---|---|---|---|---|
| | | Part Number | List Price | Part Number | List Price |
| 3/8" x 2 1/4" | 2 | NB37225 | $69.46 | NBSS37225 | $59.97 |
| 1/2" x 3" | 2 | NB50300 | $75.65 | NBSS50300 | $103.62 |
| 5/8" x 3 1/4" | 2 | NB62325 | $85.15 | NBSS62325 | $231.19 |
| 5/8" x 4 3/4" | 2 | NB62475 | $144.15 | – | – |
| 3/4" x 4 3/4" | 2 | NB75475 | $132.73 | NBSS75475 | $330.36 |
| 7/8" x 6 1/2" | 2 | NB87650 | $219.79 | – | – |
| 1" x 5 1/2" | 3 | NB10550 | $219.79 | – | – |
| 1" x 6 1/2" | 2 | NB10650 | $232.16 | – | – |
| 1 1/8" x 5 3/4" | 4 | NB12575 | $295.91 | – | – |

Orders for items in shaded areas ***cannot*** be cancelled or returned.

## GRINNELL Gasket Lubricant

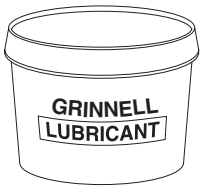


| Size | Part Number | List Price |
|---|---|---|
| 1 Quart | 32005 | $258.65 |

Orders for items in shaded areas ***cannot*** be cancelled or returned.

*See latest catalog or technical data sheets for specific approvals, listings, and design parameters.*
*POA = Price on availability. Prices subject to change without notice.*

## G-FIRE #510S – Fire Protection Short Pattern Grooved 90° Elbow

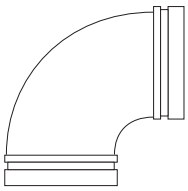

| Nom. Size | Painted | | Galvanized | |
|---|---|---|---|---|
| | Part Number | List Price | Part Number | List Price |
| 2" | **510S20P** | $52.45 | **510S20GP** | $121.78 |
| 2 1/2" | **510S25P** | $62.45 | **510S25GP** | $131.05 |
| 3" | **510S30P** | $92.24 | **510S30GP** | $247.65 |
| 4" | **510S40P** | $143.29 | **510S40GP** | $400.84 |
| 6" | **510S60P** | $356.58 | **510S60GP** | $948.20 |
| 8" | **510S80P** | $588.25 | **510S80GP** | $880.22 |

All elbows are cast fittings.

**Technical Data Sheet: TFP1815**

## G-FIRE #519S – Fire Protection Short Pattern Grooved Tee

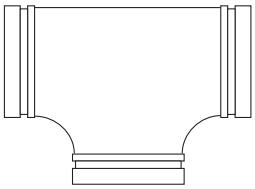

| Nom. Size | Painted | | Galvanized | |
|---|---|---|---|---|
| | Part Number | List Price | Part Number | List Price |
| 2" | **519S20P** | $60.25 | **519S20GP** | $210.89 |
| 2 1/2" | **519S25P** | $74.56 | **519S25GP** | $187.69 |
| 3" | **519S30P** | $122.91 | **519S30GP** | $336.72 |
| 4" | **519S40P** | $220.57 | **519S40GP** | $519.57 |
| 6" | **519S60P** | $460.33 | **519S60GP** | $866.26 |
| 8" | **519S80P** | $822.03 | **519S80GP** | $2,307.96 |

All tees are cast fittings.

**Technical Data Sheet: TFP1815**

Section 16 Specialty Items
Section 18 Grooved Product
Section 20 Miscellaneous
Section 21 Electrical
Section 22 Corrosion Solutions
Section C Valves & Hose Equipment
Section D Backflow
Section F Pipe & Accessories
Section J Lubricants
Section K Misc.

## G-FIRE #501 – Fire Protection Standard Pattern Grooved 45° Elbow

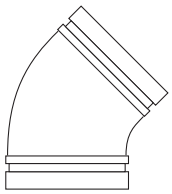

| Nom. Size | Painted | | Galvanized | |
|---|---|---|---|---|
| | Part Number | List Price | Part Number | List Price |
| 1 1/4" | **50113P** | $34.14 | **50113GP** | $192.85 |
| 1 1/2" | **50115P** | $36.21 | **50115GP** | $191.16 |
| 2" | **50120P** | $48.58 | **50120GP** | $144.66 |
| 2 1/2" | **50125P** | $81.58 | **50125GP** | $209.50 |
| 3" | **50130P** | $101.57 | **50130GP** | $276.96 |
| 4" | **50140P** | $168.72 | **50140GP** | $433.20 |
| 6" | **50160P** | $447.28 | **50160GP** | $1,083.35 |
| 8" | **50180P** | $733.94 | **50180GP** | $1,768.40 |
| 10" | **50110P** | $4,845.28 | **50110GP** | $8,355.13 |
| 12" | **50112P** | $7,750.72 | **50112GP** | $9,029.57 |

All elbows are cast fittings.

Orders for items in shaded areas ***cannot*** be cancelled or returned.

**Technical Data Sheet: TFP1815**

## G-FIRE #510 – Fire Protection Standard Pattern Grooved 90° Elbow

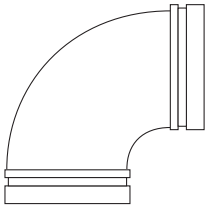

| Nom. Size | Painted | | Galvanized | |
|---|---|---|---|---|
| | Part Number | List Price | Part Number | List Price |
| 1 1/4" | **51013P** | $41.40 | **51013GP** | $151.23 |
| 1 1/2" | **51015P** | $40.12 | **51015GP** | $146.62 |
| 2" | **51020P** | $56.87 | **51020GP** | $207.90 |
| 2 1/2" | **51025P** | $90.38 | **51025GP** | $226.68 |
| 3" | **51030P** | $122.64 | **51030GP** | $333.58 |
| 4" | **51040P** | $188.41 | **51040GP** | $544.98 |
| 6" | **51060P** | $437.96 | **51060GP** | $1,407.01 |
| 8" | **51080P** | $921.17 | **51080GP** | $2,467.08 |
| 10" | **51010P** | $2,469.35 | **51010GP** | $4,085.66 |
| 12" | **51012P** | $5,248.66 | **51012GP** | $4,830.36 |

All elbows are cast fittings.

**Technical Data Sheet: TFP1815**

## G-FIRE #510DE – 90° Elbow with 1" Outlet

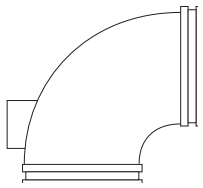

| Nom. Size | Painted | | Galvanized | |
|---|---|---|---|---|
| | Part Number | List Price | Part Number | List Price |
| 2" | **51020DS** | $434.21 | **51020DGS** | $966.42 |
| 2 1/2" * | **51025DS** | $473.68 | **51025DGS** | $1,011.67 |
| 3" * | **51030DS** | $571.30 | **51030DGS** | $1,238.10 |
| 4" * | **51040DS** | $725.34 | **51040DGS** | $1,337.10 |
| 6" * | **51060DS** | $1,033.94 | **51060DGS** | $3,199.01 |
| 8" * | **51080DS** | $1,832.52 | **51080DGS** | $12,147.07 |

Elbow is segmentally welded except where a * indicates it is available as a cast fitting.

**Technical Data Sheet: TFP1815**

## G-FIRE #519 – Fire Protection Standard Pattern Grooved Tee

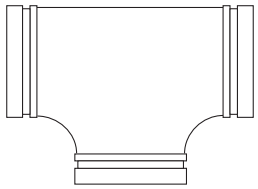

| Nom. Size | Painted | | Galvanized | |
|---|---|---|---|---|
| | Part Number | List Price | Part Number | List Price |
| 1 1/4" | **51913P** | $59.21 | **51913GP** | $100.68 |
| 1 1/2" | **51915P** | $62.69 | **51915GP** | $91.49 |
| 2" | **51920P** | $86.65 | **51920GP** | $320.31 |
| 2 1/2" | **51925P** | $141.97 | **51925GP** | $270.33 |
| 3" | **51930P** | $182.41 | **51930GP** | $447.76 |
| 4" | **51940P** | $318.70 | **51940GP** | $712.04 |
| 5" | **21950S** | $2,288.65 | **–** | – |
| 6" | **51960P** | $589.18 | **51960GP** | $2,063.60 |
| 8" | **51980P** | $1,544.63 | **51980GP** | $4,392.48 |
| 10" | **51910P** | $3,797.06 | **51910GP** | $8,101.32 |
| 12" | **51912P** | $9,387.94 | **51912GP** | $11,144.87 |

All tees are cast fittings.

Orders for items in shaded areas ***cannot*** be cancelled or returned.

**Technical Data Sheet: TFP1815**

Section 16 Specialty Items
Section 18 Grooved Product
Section 20 Miscellaneous
Section 21 Electrical
Section 22 Corrosion Solutions
Section C Valves & Hose Equipment
Section D Backflow
Section F Pipe & Accessories
Section J Lubricants
Section K Misc.

## #260 – Grooved Cap

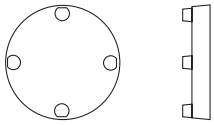

| Nom. Size | Painted | | Galvanized | |
|---|---|---|---|---|
| | Part Number | List Price | Part Number | List Price |
| 1 1/4" | 26013P | $26.81 | 26013GP | $52.00 |
| 1 1/2" | 26015P | $27.53 | 26015GP | $57.58 |
| 2" | 26020P | $27.73 | 26020GP | $99.45 |
| 2 1/2" | 26025P | $29.87 | 26025GP | $87.98 |
| 3" | 26030P | $45.13 | 26030GP | $152.06 |
| 4" | 26040P | $68.07 | 26040GP | $205.38 |
| 5" | 26050P | $310.82 | 26050GP | $513.16 |
| 6" | 26060P | $150.08 | 26060GP | $534.68 |
| 8" | 26080P | $238.18 | 26080GP | $808.67 |
| 10" | 26010P | $1,177.31 | 26010GP | $2,524.03 |
| 12" | 26012P | $3,458.70 | 26012GP | $3,873.99 |

All caps are cast fittings.

Orders for items in shaded areas ***cannot*** be cancelled or returned.

**Technical Data Sheet: TFP1815**

## #260 – Grooved Cap with 1/2" Tap

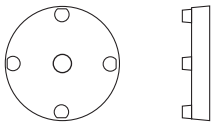

| Nom. Size | Painted | |
|---|---|---|
| | Part Number | List Price |
| 2" | 26020TP | $178.89 |
| 2 1/2" | 26025TP | $236.71 |
| 3" | 26030TP | $290.39 |
| 4" | 26040TP | $378.03 |
| 6" | 26060TP | $472.25 |
| 8" | 26080TP | $541.49 |

All caps are cast fittings.

Orders for items in shaded areas ***cannot*** be cancelled or returned.

**Technical Data Sheet: TFP1815**

## #260 – Grooved Cap with 1" Tap

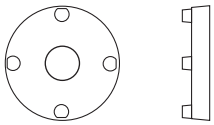

| Nom. Size | Painted | |
|---|---|---|
| | Part Number | List Price |
| 2" | 26020T1P | $165.16 |
| 2 1/2" | 26025T1P | $162.83 |
| 3" | 26030T1P | $263.16 |
| 4" | 26040T1P | $322.50 |
| 6" | 26060T1P | $1,003.72 |
| 8" | 26080T1P | $512.04 |

All caps are cast fittings.

Orders for items in shaded areas ***cannot*** be cancelled or returned.

**Technical Data Sheet: TFP1815**

## #40-5 – Strap

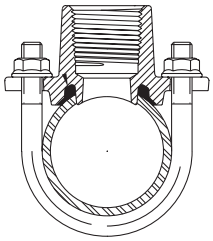

| Nom. Size | Part Number with "E" Gasket | List Price |
|---|---|---|
| 1 1/4" x 1/2" | STP1305ES | $83.26 |
| 1 1/4" x 3/4" | STP13075ES | $83.26 |
| 1 1/4" x 1" | STP1310ES | $81.94 |
| 1 1/2" x 1/2" | STP1505ES | $81.94 |
| 1 1/2" x 3/4" | STP15075ES | $81.94 |
| 1 1/2" x 1" | STP1510ES | $84.14 |
| 2" x 1/2" | STP2005ES | $84.14 |
| 2" x 3/4" | STP20075ES | $84.14 |
| 2" x 1" | STP2010ES | $84.14 |
| 2 1/2" x 1/2" | STP2505ES | $66.44 |
| 2 1/2" x 3/4" | STP25075ES | $66.44 |
| 2 1/2" x 1" | STP2510ES | $66.44 |

**Technical Data Sheet: TFP1720**

## #512 and #312 – Grooved 22 1/2° Elbow

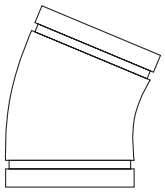

| Nom. Size | Painted | | Galvanized | |
|---|---|---|---|---|
| | Part Number | List Price | Part Number | List Price |
| 1 1/4" | **51213S** | $408.58 | -- | – |
| 1 1/2" | **51215S** | $412.63 | **51215GS** | $513.66 |
| 2" | **51220S** | $391.36 | -- | – |
| 2 1/2" * | **31225S** | $414.13 | – | – |
| 3" | **51230S** | $595.92 | -- | – |
| 4" | **51240S** | $793.83 | **51240GS** | $1,255.97 |
| 6" | **51260S** | $1,654.61 | **51260GS** | $2,820.02 |
| 8" * | **31280S** | $4,445.77 | -- | – |

Elbow is Cast except where a * indicates it is segmentally welded.

Orders for items in shaded areas ***cannot*** be cancelled or returned.

**Technical Data Sheet: TFP1815**

## #511 and #311 – Grooved 11 1/4° Elbow

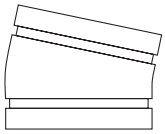

| Nom. Size | Painted | | Galvanized | |
|---|---|---|---|---|
| | Part Number | List Price | Part Number | List Price |
| 1 1/4" | **51113S** | $403.74 | – | – |
| 1 1/2" | **51115S** | $403.68 | **51115GS** | $800.39 |
| 2" | **51120S** | $938.66 | **51120GS** | $1,031.19 |
| 2 1/2" * | **31125S** | $938.68 | – | – |
| 3" | **51130S** | $601.71 | -- | – |
| 4" | **51140S** | $743.55 | -- | – |
| 6" | **51160S** | $2,178.55 | **51160GS** | $2,692.83 |
| 8" * | **75308** | $3,987.40 | – | – |

Elbow is Cast except where a * indicates it is segmentally welded.

Orders for items in shaded areas ***cannot*** be cancelled or returned.

**Technical Data Sheet: TFP1815**

## #221 and #321 – Grooved Reducing Tee

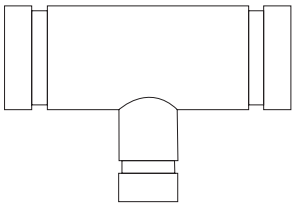

| Nom. Size | Painted | |
|---|---|---|
| | Part Number | List Price |
| 3" x 2" | **2213020S *** | $2,395.24 |
| 6" x 4" | **2216040S *** | $1,876.38 |
| 6" x 5" | **75433** | $3,535.88 |

Reducing Tee is segmentally welded except where a * indicates it is available as a cast fitting.

**Technical Data Sheet: TFP1815**

## #550 and #350 – Concentric Reducer

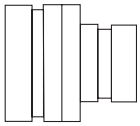

| Nom. Size | Painted | | Galvanized | |
|---|---|---|---|---|
| | Part Number | List Price | Part Number | List Price |
| 1 1/2" x 1 1/4" | **5501513S *** | $444.18 | **5501513GS *** | $463.69 |
| 2" x 1" | **72852** | $421.64 | **--** | – |
| * 2" x 1 1/4" | **72853** | $652.10 | **73403** | $817.20 |
| * 2" x 1 1/2" | **72854** | $442.55 | **--** | – |
| 2 1/2" x 1 1/4" | **3502513S** | $608.29 | **--** | – |
| 2 1/2" x 1 1/2" | **3502515S** | $635.20 | **3502515GS** | $672.14 |
| * 2 1/2" x 2" | **5502520S *** | $388.48 | **5502520GS *** | $492.53 |
| 3" x 1 1/4" | **72861** | $1,124.38 | **--** | – |
| 3" x 1 1/2" | **5503015S *** | $435.29 | **5503015GS *** | $562.29 |
| 3" x 2" | **5503020S *** | $327.85 | **5503020GS *** | $428.69 |
| 3" x 2 1/2" | **5503025S *** | $446.53 | **5503025GS *** | $571.35 |
| 4" x 1 1/4" | **72868** | $6,100.33 | **--** | – |
| 4" x 1 1/2" | **72869** | $1,171.95 | **--** | – |
| 4" x 2" | **5504020S *** | $480.70 | **5504020GS *** | $536.94 |
| 4" x 2 1/2" | **5504025S *** | $582.83 | **5504025GS *** | $736.43 |
| 4" x 3" | **5504030S *** | $519.67 | **5504030GS *** | $735.46 |
| 4" x 3 1/2" | **72875** | $936.92 | **–** | – |
| 5" x 4" | **5505040S *** | $828.69 | **5505040GS *** | $890.48 |
| 6" x 2" | **5506020S *** | $641.62 | **5506020GS *** | $1,989.81 |
| 6" x 2 1/2" | **3506025S** | $1,836.20 | **–** | – |
| 6" x 3" | **5506030S *** | $900.73 | **5506030GS *** | $1,378.83 |
| 6" x 4" | **5506040S *** | $767.19 | **5506040GS *** | $1,142.15 |
| 6" x 5" | **5506050S *** | $1,341.49 | **5506050GS *** | $1,396.29 |
| 8" x 3" | **3508030S** | $2,937.91 | **–** | – |
| 8" x 4" | **5508040S *** | $1,807.28 | **5508040GS *** | $2,387.68 |
| 8" x 6" | **5508060S *** | $848.14 | **5508060GS *** | $3,118.11 |
| 10" x 6" | **5501060S *** | $5,014.30 | **5501060GS *** | $13,460.22 |
| 10" x 8" | **5501080S *** | $2,152.57 | **5501080GS *** | $6,782.66 |
| 12" x 6" | **3501260S** | $9,228.76 | **–** | – |
| 12" x 8" | **5501280S *** | $9,502.50 | **5501280GS *** | $11,976.31 |
| 12" x 10" | **5501210S *** | $8,140.31 | **5501210GS *** | $4,760.03 |

Reducer is segmentally welded except where a * indicates it is available as a cast fitting.

Orders for items in shaded areas ***cannot*** be cancelled or returned.

**Technical Data Sheet: TFP1815**

## #341 – Grooved x Flanged Adapter 150 Lbs. – Schedule 40

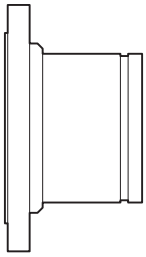

| Nom. Size | Painted | | Galvanized | |
|---|---|---|---|---|
| | Part Number | List Price | Part Number | List Price |
| 2 1/2" | 73231 | $3,492.73 | 73251 | $13,774.03 |
| 4" | -- | – | 73253 | $19,866.19 |
| 5" | – | – | 73254 | $26,095.58 |

All adapters are segmentally welded.

Orders for items in shaded areas ***cannot*** be cancelled or returned.

**Technical Data Sheet: TFP1815**

## #323 – Reducing Tee with Threaded Branch

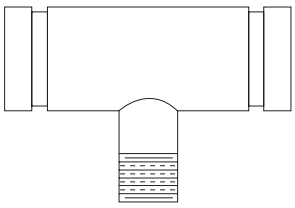

| Nom. Size | Galvanized | |
|---|---|---|
| | Part Number | List Price |
| 5" x 2" | 75534 | $3,888.56 |

All tees are segmentally welded.

Orders for items in shaded areas ***cannot*** be cancelled or returned.

**Technical Data Sheet: TFP1815**

## #327 – Grooved Cross

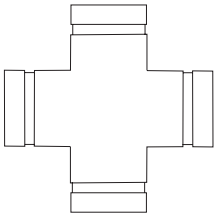

| Nom. Size | Painted | |
|---|---|---|
| | Part Number | List Price |
| 2" | 75840 | $1,285.50 |
| 2 1/2" | 75841 | $1,243.81 |
| 3" | 75842 | $2,235.08 |
| 4" | 75843 | $3,636.46 |
| 6" | 75845 | $9,872.12 |
| 8" | 75846 | $12,759.75 |

Orders for items in shaded areas ***cannot*** be cancelled or returned.

**Technical Data Sheet: TFP1815**

## #372 – Reducer Small End Threaded (Male)

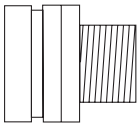

| Nom. Size | Painted | | Galvanized | |
|---|---|---|---|---|
| | Part Number | List Price | Part Number | List Price |
| 1 1/2" x 1" | 76800 | $527.77 | – | – |
| 2 1/2" x 2" | 76804 | $1,513.45 | – | – |
| 3" x 2" | 76806 | $1,102.74 | -- | – |
| 4" x 2" | 76809 | $1,406.21 | 76834 | $718.63 |

All reducers are segmentally welded.

Orders for items in shaded areas ***cannot*** be cancelled or returned.

**Technical Data Sheet: TFP1815**

## #391 – Groove x Male Thread Adapter Nipple

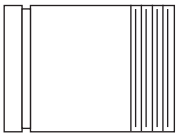

| Nom. Size | Painted | | Galvanized | |
|---|---|---|---|---|
| | Part Number | List Price | Part Number | List Price |
| 1 1/4" x 4" | 75121 | $305.42 | – | – |
| 1 1/2" x 4" | 75122 | $272.69 | – | – |
| 2" x 4" | 75123 | $270.90 | -- | – |
| 2 1/2" x 4" | 75124 | $317.33 | – | – |
| 3" x 4" | 75125 | $378.84 | – | – |
| 4" x 6" | 75126 | $614.32 | 74297 | $1,053.26 |
| 6" x 6" | 75130 | $1,609.43 | 3916060GS | $2,744.79 |

All adapter nipples are segmentally welded.

Orders for items in shaded areas ***cannot*** be cancelled or returned.

**Technical Data Sheet: TFP1815**

## #393 – Groove x Plain Adapter Nipple

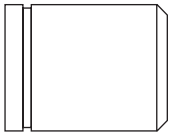

| Nom. Size | Painted | |
|---|---|---|
| | Part Number | List Price |
| 4" x 6" | 75153 | $611.49 |

All adapter nipples are segmentally welded.

Orders for items in shaded areas ***cannot*** be cancelled or returned.

**Technical Data Sheet: TFP1815**

Section 16 Specialty Items
Section 18 Grooved Product
Section 20 Miscellaneous
Section 21 Electrical
Section 22 Corrosion Solutions
Section C Valves & Hose Equipment
Section D Backflow
Section F Pipe & Accessories
Section J Lubricants
Section K Misc.

## #730 – Female Threaded Mechanical Tee with Grade "E" EPDM Gasket Threaded Outlet

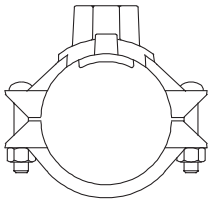

| Nom. Size | Painted | | Galvanized | |
|---|---|---|---|---|
| | Part Number | List Price | Part Number | List Price |
| 2" x 1/2" | 7302005ES | $192.99 | 7302005EGS | $443.81 |
| 2" x 3/4" | 73020075ES | $157.32 | 73020075EGS | $244.65 |
| 2" x 1" | 7302010ES | $213.81 | 7302010EGS | $435.45 |
| 2" x 1 1/4" | 7302013ES | $185.34 | 7302013EGS | $474.59 |
| 2" x 1 1/2" | 7302015ES | $205.50 | 7302015EGS | $365.32 |
| 2 1/2" x 1/2" | 7302505ES | $264.74 | 7302505EGS | $225.16 |
| 2 1/2" x 3/4" | 73025075ES | $236.73 | 73025075EGS | $335.61 |
| 2 1/2" x 1" | 7302510ES | $193.20 | 7302510EGS | $435.45 |
| 2 1/2" x 1 1/4" | 7302513ES | $222.39 | 7302513EGS | $593.30 |
| 2 1/2" x 1 1/2" | 7302515ES | $249.08 | 7302515EGS | $591.84 |
| 2 1/2" x 2" | 7302520EP | $279.50 | 7302520EGP | $565.01 |
| 3" x 1/2" | 7303005ES | $183.12 | 7303005EGS | $492.30 |
| 3" x 3/4" | 73030075ES | $183.18 | 73030075EGS | $222.56 |
| 3" x 1" | 7303010ES | $195.23 | 7303010EGS | $400.27 |
| 3" x 1 1/4" | 7303013ES | $332.08 | 7303013EGS | $557.03 |
| 3" x 1 1/2" | 7303015ES | $321.87 | 7303015EGS | $637.73 |
| 3" x 2" | 7303020ES | $271.51 | 7303020EGS | $391.61 |
| 4" x 1/2" | 7304005ES | $231.43 | 7304005EGS | $279.44 |
| 4" x 3/4" | 73040075ES | $284.33 | 73040075EGS | $274.79 |
| 4" x 1" | 7304010ES | $327.49 | 7304010EGS | $573.18 |
| 4" x 1 1/4" | 7304013ES | $320.73 | 7304013EGS | $570.16 |
| 4" x 1 1/2" | 7304015ES | $396.87 | 7304015EGS | $769.98 |
| 4" x 2" | 7304020ES | $285.36 | 7304020EGS | $777.45 |
| 4" x 2 1/2" | 7304025ES | $313.36 | 7304025EGS | $765.36 |
| 4" x 3" | 7304030ES | $324.42 | 7304030EGS | $426.51 |
| 5" x 1 1/2" | 7305015EP | $392.72 | 7305015EGP | $452.26 |
| 5" x 2" | 7305020ES | $351.26 | 7305020EGS | $608.38 |
| 5" x 2 1/2" | 7305025ES | $642.54 | 7305025EGS | $471.70 |
| 5" x 3" | 7305030EP | $838.07 | 7305030EGP | $879.35 |
| 6" x 1 1/4" | 7306013EP | $436.02 | 7306013EGP | $117.05 |
| 6" x 1 1/2" | 7306015ES | $563.13 | 7306015EGS | $473.52 |
| 6" x 2" | 7306020ES | $624.54 | 7306020EGS | $446.73 |
| 6" x 2 1/2" | 7306025ES | $665.94 | 7306025EGS | $263.98 |
| 6" x 3" | 7306030ES | $464.80 | 7306030EGS | $514.54 |
| 6" x 4" | 7306040ES | $499.46 | 7306040EGS | $668.04 |
| 8" x 2 1/2" | 7308025ES | $981.24 | 7308025EGS | $2,824.71 |
| 8" x 3" | 7308030ES | $788.35 | 7308030EGS | $2,989.34 |
| 8" x 4" | 7308040ES | $829.78 | 7308040EGS | $3,132.49 |

Orders for items in shaded areas ***cannot*** be cancelled or returned.

**Technical Data Sheet: TFP1860**

## #730 – Grooved Mechanical Tee with Grade "E" EPDM Gasket Grooved Outlet

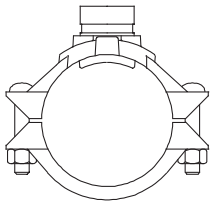

| Nom. Size | Painted | | Galvanized | |
|---|---|---|---|---|
| | Part Number | List Price | Part Number | List Price |
| 2" x 1¼" | 7302013ERS | $217.84 | 7302013EGRS | $474.59 |
| 2" x 1½" | 7302015ERS | $229.75 | 7302015EGRS | $365.32 |
| 2½" x 1¼" | 7302513ERS | $234.13 | 7302513EGRS | $561.95 |
| 2½" x 1½" | 7302515ERS | $271.25 | 7302515EGRS | $545.87 |
| 2½" x 2" | 7302520ERP | $408.62 | 7302520EGRP | $397.06 |
| 3" x 1¼" | 7303013ERS | $264.83 | 7303013EGRS | $403.34 |
| 3" x 1½" | 7303015ERS | $346.36 | 7303015EGRS | $603.62 |
| 3" x 2" | 7303020ERS | $350.10 | 7303020EGRS | $855.55 |
| 4" x 1¼" | 7304013ERS | $381.54 | 7304013EGRS | $400.24 |
| 4" x 1½" | 7304015ERS | $437.46 | 7304015EGRS | $644.41 |
| 4" x 2" | 7304020ERS | $351.82 | 7304020EGRS | $748.97 |
| 4" x 2½" | 7304025ERS | $301.99 | 7304025EGRS | $786.61 |
| 4" x 3" | 7304030ERS | $330.40 | 7304030EGRS | $426.51 |
| 5" x 1½" | 7305015ERP | $343.29 | 7305015EGRP | $452.26 |
| 5" x 2" | 7305020ERS | $754.05 | 7305020EGRS | $435.50 |
| 5" x 2½" | 7305025ERS | $639.10 | 7305025EGRS | $471.70 |
| 5" x 3" | 7305030ERP | $320.71 | 7305030EGRP | $879.35 |
| 6" x 1¼" | 7306013ERP | $550.30 | 7306013EGRP | $117.05 |
| 6" x 1½" | 7306015ERS | $349.78 | 7306015EGRS | $702.82 |
| 6" x 2" | 7306020ERS | $473.22 | 7306020EGRS | $987.85 |
| 6" x 2½" | 7306025ERS | $533.75 | 7306025EGRS | $263.98 |
| 6" x 3" | 7306030ERS | $464.80 | 7306030EGRS | $514.54 |
| 6" x 4" | 7306040ERS | $579.81 | 7306040EGRS | $901.85 |
| 8" x 2½" | 7308025ERS | $867.65 | 7308025EGRS | $815.44 |
| 8" x 3" | 7308030ERS | $788.35 | 7308030EGRS | $2,989.34 |
| 8" x 4" | 7308040ERS | $829.78 | 7308040EGRS | $1,044.18 |

Orders for items in shaded areas ***cannot*** be cancelled or returned.

**Technical Data Sheet: TFP1860**

## Model BFV-300 Butterfly Valves - 300 psi - Grooved
## Gear Operated w/ Tamper Switch, Tap Boss Int Switch Supervisory - OPEN

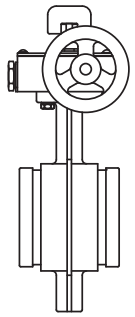

| Nom. Size | Part Numbers | List Price |
|---|---|---|
| 2 1/2" Model BFV-300 Butterfly Valve - OPEN | **59300G025WS** | $887.61 |
| 3" Model BFV-300 Butterfly Valve - OPEN | **59300G030WS** | $1,076.06 |
| 4" Model BFV-300 Butterfly Valve - OPEN | **59300G040WS** | $1,155.95 |
| 5" Model BFV-300 Butterfly Valve - OPEN | **59300G050WS** | $2,415.72 |
| 6" Model BFV-300 Butterfly Valve - OPEN | **59300G060WS** | $1,506.41 |
| 8" Model BFV-300 Butterfly Valve - OPEN | **59300G080WS** | $1,563.67 |
| 10" Model BFV-300 Butterfly Valve - OPEN | **59300G100WS** | $4,088.13 |

**Technical Data Sheet - TFP1511**

## G-FIRE #CV-1F – Grooved Check Valve

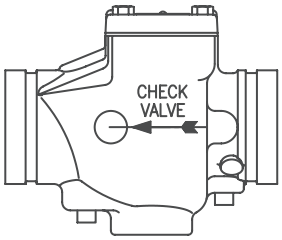


| Nom. Size | Part Number | List Price |
|---|---|---|
| 2" | **59-590-0-020** | $696.95 |
| 2 1/2" | **59-590-0-025** | $696.95 |
| 3" | **59-590-0-030** | $696.95 |
| 4" | **59-590-0-040** | $913.49 |
| 5" | **59-590-0-050** | $1,632.58 |
| 6" | **59-590-0-060** | $1,765.54 |
| 8" | **59-590-0-080** | $2,754.26 |
| 10" | **59-590-0-100** | $5,460.66 |
| 12" | **59-590-0-120** | $13,142.42 |

Orders for items in shaded areas ***cannot*** be cancelled or returned.

**Technical Data Sheet: TFP1550**

## Global Grooved Couplings Packaging Quantity

| Nom. Size | #579 Rigid Coupling | | | #577 Rigid Coupling | | | #705 Flexible Coupling | | | #707 Flexible Coupling | | |
|---|---|---|---|---|---|---|---|---|---|---|---|---|
| | *Pieces / Carton* | *Cartons / Pallet* | *Pieces / Pallet* | *Pieces / Carton* | *Cartons / Pallet* | *Pieces / Pallet* | *Pieces / Carton* | *Cartons / Pallet* | *Pieces / Pallet* | *Pieces / Carton* | *Cartons / Pallet* | *Pieces / Pallet* |
| **1"** | - | - | - | 30 | 36 | 1,080 | 30 | 36 | 1,080 | 20 | 36 | 720 |
| **1 1/4"** | - | - | 720 | 26 | 36 | 936 | 24 | 36 | 864 | 17 | 36 | 612 |
| **1 1/2"** | - | - | 792 | 22 | 36 | 792 | 20 | 36 | 720 | 14 | 36 | 504 |
| **2"** | 16 | 36 | 576 | 20 | 36 | 720 | 16 | 36 | 576 | 13 | 36 | 468 |
| **2 1/2"** | 12 | 36 | 432 | 16 | 36 | 576 | 12 | 36 | 432 | 11 | 36 | 396 |
| **3"** | - | - | 520 | - | - | 630 | - | - | 520 | - | - | 520 |
| **4"** | - | - | 350 | - | - | 377 | - | - | 324 | - | - | 324 |
| **5"** | - | - | - | - | - | 240 | - | - | 198 | - | - | 198 |
| **6"** | - | - | 180 | - | - | 180 | - | - | 165 | - | - | 165 |
| **8"** | - | - | 80 | - | - | 80 | - | - | 80 | - | - | 80 |
| **10"** | - | - | - | - | - | 58 | - | - | 40 | - | - | 40 |
| **12"** | - | - | - | - | - | 38 | - | - | 30 | - | - | 30 |

## Global Grooved Couplings Packaging Quantity

| Nom. Size | #71 Flange Adapter | | | Size Range | #716 Reducing Coupling | | |
|---|---|---|---|---|---|---|---|
| | *Pieces / Carton* | *Cartons / Pallet* | *Pieces / Pallet* | | *Pieces / Carton* | *Cartons / Pallet* | *Pieces / Pallet* |
| **1"** | - | - | - | **2" x 1 1/2"** | 16 | 36 | 576 |
| **1 1/4"** | - | - | - | **2 1/2" x 2"** | 12 | 36 | 432 |
| **1 1/2"** | - | - | - | **3" x 2"** | 7 | 36 | 252 |
| **2"** | 1 | - | - | **3" x 2 1/2"** | 7 | 36 | 252 |
| **2 1/2"** | 1 | - | - | **4" x 2"** | 5 | 36 | 180 |
| **3"** | 1 | - | - | **4" x 2 1/2"** | 5 | 36 | 180 |
| **4"** | 1 | - | - | **4" x 3"** | 5 | 36 | 180 |
| **5"** | 1 | - | - | **5" x 4"** | 3 | 36 | 108 |
| **6"** | 1 | - | - | **6" x 4"** | 3 | 36 | 108 |
| **8"** | 1 | - | - | **6" x 5"** | 3 | 36 | 108 |
| **10"** | 1 | - | - | **8" x 6"** | - | - | 72 |
| **12"** | 1 | - | - | **-** | - | - | - |

Section 16 Specialty Items
Section 18 Grooved Product
Section 20 Miscellaneous
Section 21 Electrical
Section 22 Corrosion Solutions
Section C Valves & Hose Equipment
Section D Backflow
Section F Pipe & Accessories
Section J Lubricants
Section K Misc.

## Global Grooved Fittings Packaging Quantity

| Nom. Size | #510 90° Elbow | | | #510S Short Pattern 90° Elbow | | | #501 45° Elbow | | |
|---|---|---|---|---|---|---|---|---|---|
| | *Pieces / Carton* | *Cartons / Pallet* | *Pieces / Pallet* | *Pieces / Carton* | *Cartons / Pallet* | *Pieces / Pallet* | *Pieces / Carton* | *Cartons / Pallet* | *Pieces / Pallet* |
| **1"** | - | - | - | - | - | - | - | - | - |
| **1 1/4"** | 32 | 36 | 1152 | - | - | - | 50 | 36 | 1800 |
| **1 1/2"** | 28 | 36 | 1008 | - | - | - | 39 | 36 | 1404 |
| **2"** | 15 | 36 | 540 | 18 | 36 | 648 | 24 | 36 | 864 |
| **2 1/2"** | 8 | 36 | 288 | 12 | 36 | 432 | 12 | 36 | 432 |
| **3"** | 5 | 36 | 180 | 8 | 36 | 288 | 8 | 36 | 288 |
| **4"** | - | - | 120 | - | - | 168 | - | - | 210 |
| **5"** | - | - | 65 | - | - | - | - | - | 96 |
| **6"** | - | - | 40 | - | - | 44 | - | - | 54 |
| **8"** | - | - | 21 | - | - | 22 | - | - | 36 |
| **10"** | - | - | 7 | - | - | - | - | - | 16 |
| **12"** | - | - | 4 | - | - | - | - | - | 12 |

## Global Grooved Fittings Packaging Quantity

| Nom. Size | #519 Tee | | | #519S Short Pattern Tee | | | #260 Cap | | |
|---|---|---|---|---|---|---|---|---|---|
| | *Pieces / Carton* | *Cartons / Pallet* | *Pieces / Pallet* | *Pieces / Carton* | *Cartons / Pallet* | *Pieces / Pallet* | *Pieces / Carton* | *Cartons / Pallet* | *Pieces / Pallet* |
| **1"** | - | - | - | - | - | - | - | - | - |
| **1 1/4"** | 26 | 36 | 936 | - | - | - | 102 | 36 | 3672 |
| **1 1/2"** | 18 | 36 | 648 | - | - | - | 81 | 36 | 2916 |
| **2"** | 12 | 36 | 432 | 14 | 36 | 504 | 53 | 36 | 1908 |
| **2 1/2"** | 5 | 36 | 180 | 8 | 36 | 288 | 36 | 36 | 1296 |
| **3"** | 3 | 36 | 108 | 5 | 36 | 180 | 26 | 36 | 936 |
| **4"** | - | - | 80 | - | - | 102 | 12 | 36 | 432 |
| **5"** | - | - | 46 | - | - | - | 4 | 36 | 144 |
| **6"** | - | - | 29 | - | - | 37 | 4 | 36 | 144 |
| **8"** | - | - | 14 | - | - | 18 | 3 | 36 | 108 |
| **10"** | - | - | 7 | - | - | - | 1 | 70 | 70 |
| **12"** | - | - | 4 | - | - | - | 1 | 50 | 50 |

## Global Grooved Fittings Packaging Quantity

| Nom. Size | #550 Concentric Reducer | | |
|---|---|---|---|
| | *Pieces / Carton* | *Cartons / Pallet* | *Pieces / Pallet* |
| **2 1/2" x 2"** | 27 | 36 | 972 |
| **3" x 1 1/2"** | 20 | 36 | 720 |
| **3" x 2"** | 20 | 36 | 720 |
| **3" x 2 1/2"** | 18 | 36 | 648 |
| **4" x 2"** | 14 | 36 | 504 |
| **4" x 2 1/2"** | 14 | 36 | 504 |
| **4" x 3"** | 14 | 36 | 504 |
| **5" x 4"** | 7 | 36 | 252 |
| **6" x 2"** | 5 | 36 | 180 |
| **6" x 3"** | 4 | 36 | 144 |
| **6" x 4"** | 4 | 36 | 144 |
| **6" x 5"** | 4 | 36 | 144 |
| **8" x 4"** | - | - | 100 |
| **8" x 6"** | - | - | 80 |

## Global Mechanical Tees
## Packaging Quantity

| Nom. Size | #730 Mechanical Tee | | |
|---|---|---|---|
| | *Pieces / Carton* | *Cartons / Pallet* | *Pieces / Pallet* |
| **2" x 1/2"** | 14 | 27 | 378 |
| **2" x 3/4"** | 14 | 27 | 378 |
| **2" x 1"** | 13 | 27 | 351 |
| **2" x 1 1/4"** | 13 | 27 | 351 |
| **2" x 1 1/2"** | 13 | 27 | 351 |
| **2 1/2" x 1/2"** | 13 | 27 | 351 |
| **2 1/2" x 3/4"** | 13 | 27 | 351 |
| **2 1/2" x 1"** | 13 | 27 | 351 |
| **2 1/2" x 1 1/4"** | 13 | 27 | 351 |
| **2 1/2" x 1 1/2"** | 13 | 27 | 351 |
| **3" x 1/2"** | 10 | 27 | 270 |
| **3" x 3/4"** | 10 | 27 | 270 |
| **3" x 1"** | 10 | 27 | 270 |
| **3" x 1 1/4"** | 10 | 27 | 270 |
| **3" x 1 1/2"** | 9 | 27 | 243 |
| **3" x 2"** | 7 | 27 | 189 |
| **4" x 1/2"** | 8 | 27 | 216 |
| **4" x 3/4"** | 8 | 27 | 216 |
| **4" x 1"** | 8 | 27 | 216 |
| **4" x 1 1/4"** | 7 | 27 | 189 |
| **4" x 1 1/2"** | 7 | 27 | 189 |
| **4" x 2"** | 6 | 27 | 162 |
| **4" x 2 1/2"** | 6 | 27 | 162 |
| **4" x 3"** | 5 | 27 | 135 |
| **5" x 2"** | 4 | 27 | 108 |
| **5" x 2 1/2"** | 4 | 27 | 108 |
| **6" x 1 1/2"** | 3 | 27 | 81 |
| **6" x 2"** | 3 | 27 | 81 |
| **6" x 2 1/2"** | 3 | 27 | 81 |
| **6" x 3"** | 2 | 27 | 54 |
| **6" x 4"** | 2 | 27 | 54 |
| **8" x 2 1/2"** | - | - | 50 |
| **8" x 3"** | - | - | 50 |
| **8" x 4"** | - | - | 50 |

## Discontinued Valve Replacement Parts

The following repair parts are applicable to items that have been discontinued and are no longer available. Although the parts are shown in this catalog, TFPP does not guarantee the availability of the items. The parts shown in this section will be sold as long as they are available. TFPP does not have any plans to continue the production of these discontinued parts.

**Note: All Items Are Non-Returnable**

## Central - 4" Deluge Valve Model "A" (2001)

| Description | Part No. | List Price |
|---|---|---|
| Diaphragm | **82401500** | $413.13 |
| Clapper Seal | **82402600** | $442.16 |
| Cover Gasket | **82400300** | $306.21 |

## Central - 6" Deluge Valve Model "A" (2001)

| Description | Part No. | List Price |
|---|---|---|
| Clapper Seal | **82601500** | $442.16 |

## DV-5 Deluge Valves, Diaphragm Style (2019)

| Description | Part No. | List Price |
|---|---|---|
| **Replacement Diaphragm Kits for the DV-5 Deluge Valve** | | |
| 1½" DV-5 Deluge Valve Replacement Diaphragm | **92-477-1-105** | $3,572.75 |
| 2" DV-5 Deluge Valve Replacement Diaphragm | **92-477-1-107** | $3,572.75 |
| 3" DV-5 Deluge Valve Replacement Diaphragm | **92-477-1-109** | $3,721.58 |
| 4" DV-5 Deluge Valve Replacement Diaphragm | **92-477-1-101** | $9,907.81 |
| 6" DV-5 Deluge Valve Replacement Diaphragm | **92-477-1-103** | $14,138.07 |
| 8" DV-5 Deluge Valve Replacement Diaphragm | **92-477-1-111** | $25,902.52 |
| Replacement Model ASV-1 Automatic Shut-Off Valve for the DV-5 Deluge Valve | **92-343-1-021** | $787.68 |
| Replacement Model FSV-1 Fail-Safe Valve for the DV-5 Deluge Valve | **52-343-1-001** | $1,121.56 |

**Technical Data Sheets: DV-5 Valve - TFP1305,**
**Wet Pilot - TFP1310,**
**Dry Pilot - TFP1315,**
**Electric Actuation - TFP1320**
**Electric/Pneumatic Actuation - TFP1460**



*See latest Technical Data Sheets for specific Approvals, Listings, Design Parameters & available finishes.*

## Discontinued Valve Replacement Parts

The following repair parts are applicable to items that have been discontinued and are no longer available. Although the parts are shown in this catalog, TFPP does not guarantee the availability of the items. The parts shown in this section will be sold as long as they are available. TFPP does not have any plans to continue the production of these discontinued parts.

**Note: All Items Are Non-Returnable**

## PRV-1 / RV-1 Valves, Replacement Parts (2021)

| *Description* | *Part No.* | *List Price* |
|---|---|---|
| **Replacement Diaphragm Kits for the PRV-1 & RV-1 Valves** | | |
| 2" Valves, Diaphragm, Fits Either Body Style | **92-570-2-011** | $3,119.86 |
| 3" Valves, Diaphragm, Fits Either Body Style | **92-570-2-012** | $1,599.87 |
| 4" Valves, Diaphragm, Fits Either Body Style | **92-570-2-013** | $4,464.15 |
| 6" Valves, Diaphragm, Fits Either Body Style | **92-570-2-014** | $6,157.48 |
| 8" Valves, Diaphragm, Fits Either Body Style | **92-570-2-015** | $12,499.23 |
| Replacement Pilot Valve for PRV-1 & RV-1 Valves | **92-570-2-200** | $3,482.01 |
| Replacement Strainer for the PRV-1 & RV-1 for 2", 3" & 4" Valves | **92-570-2-202** | $383.95 |
| Replacement Strainer for the PRV-1 & RV-1 for 6" & 8" Valves | **92-570-2-209** | $478.85 |
| Replacement Fittings Pressure Sensor Insert for the PRV-1 & RV-1 for 3" Valve | **92-570-2-204** | $276.08 |
| Replacement Fittings Pressure Sensor Insert for the PRV-1 & RV-1 for 4" Valve | **92-570-2-205** | $276.08 |
| Replacement Fittings Pressure Sensor Insert for the PRV-1 & RV-1 for 6" Valve | **92-570-2-206** | $276.08 |
| Replacement Fittings Pressure Sensor Insert for the PRV-1 & RV-1 for 8" Valve | **92-570-2-207** | $276.08 |
| Replacement Water Pressure Gauge for the PRV-1 & RV-1 Valves | **92-570-2-211** | $207.06 |
| Replacement Water Needle Valve for the PRV-1 & RV-1 Valves | **92-570-2-212** | $733.33 |
| Replacement Tubing and Fitting Kit for the PRV-1 & RV-1 for 2" Globe Style Valves | **92-570-3-001** | POA |
| Replacement Tubing and Fitting Kit for the PRV-1 & RV-1 for 3" Globe Style Valves | **92-570-3-002** | $1,332.96 |
| Replacement Tubing and Fitting Kit for the PRV-1 & RV-1 for 4" Globe Style Valves | **92-570-3-003** | $1,799.49 |
| Replacement Tubing and Fitting Kit for the PRV-1 & RV-1 for 6" Globe Style Valves | **92-570-3-004** | POA |
| Replacement Tubing and Fitting Kit for the PRV-1 & RV-1 for 8" Globe Style Valves | **92-570-3-005** | POA |
| Replacement Tubing and Fitting Kit for the PRV-1 & RV-1 for 2" Angle Style Valves | **92-571-3-001** | POA |

**Technical Data Sheets: PRV-1 Valve - TFP1580,**
**RV-1 Pilot - TFP1585,**

*See latest Technical Data Sheets for specific Approvals, Listings, Design Parameters & available finishes.*

## Discontinued Valve Replacement Parts

The following repair parts are applicable to items that have been discontinued and are no longer available. Although the parts are shown in this catalog, TFPP does not guarantee the availability of the items. The parts shown in this section will be sold as long as they are available. TFPP does not have any plans to continue the production of these discontinued parts.

**Note: All Items Are Non-Returnable**

## Central - Model F & G Alarm Valve (2003)

| *Description* | *Flanged x Flanged* | *List Price (each)* |
|---|---|---|
| **Replacement Parts for Model "F" & "G" 4" Alarm Valves** | | |
| Clapper Seal | **81405000** | $395.19 |
| **Replacement Parts for Model "F" & "G" 8" Alarm Valves** | | |
| Cover Gasket | **81803000** | $271.79 |
| **Technical Data Sheet: Central 7-3.0 (4", 6", 8")** | | |

## Gem - Model F-302 & F-3021, 4" Dry Pipe Valve Replacement Parts (2002)

| *Description* | *Part Number* | *List Price* |
|---|---|---|
| ***Repair Parts Kit,*** Including: Clapper Facing, O-Ring #016, O-Ring #111, Auxiliary Clapper Facing, Auxiliary Clapper Spring, Auxiliary Clapper, Chamber Gasket, Handhole Cover Gasket, 1.5 gms of FS3452 | **92-302-1-416** | $1,961.89 |

## Gem - Model F-302 & F-3021, 6" Dry Pipe Valve Replacement Parts (2002)

| *Description* | *Part Number* | *List Price* |
|---|---|---|
| ***Repair Parts Kit,*** Including Clapper Facing, O-Ring #016, O-Ring #111, Auxiliary Clapper Facing, Auxiliary Clapper Spring, Auxiliary Clapper Chamber Gasket, Handhole Cover Gasket, 1.5 gms of FS3452 | **92-302-1-617** | $2,108.73 |

## Gem - Model A-2, 2" Dry Pipe Valve Replacement Parts (1999)

| *Description* | *Part Number* | *List Price* |
|---|---|---|
| Cover O-Ring and Diaphragm Kit | **92-414-1-216** | $627.32 |

## Gem - Model A-4, Valve Replacement Parts

| *Description* | *Part Number* | *List Price* |
|---|---|---|
| Drain /Vent Fitting 1/4" BR | **92-032-1-002** | $39.49 |
| Spare Check Clapp 3 | **92-516-1-302** | POA |
| A-4 Valve Repair kit | **92-404-1-416** | $435.68 |
| A-4 Valve Repair kit | **92-404-1-616** | $451.99 |



*See latest Technical Data Sheets for specific Approvals, Listings, Design Parameters & available finishes.*

Section 16 Specialty Items
Section 18 Grooved Product
Section 20 Miscellaneous
Section 21 Electrical
Section 22 Corrosion Solutions
Section C Valves & Hose Equipment
Section D Backflow
Section F Pipe & Accessories
Section J Lubricants
Section K Misc.

## Discontinued Valve Replacement Parts

The following repair parts are applicable to items that have been discontinued and are no longer available. Although the parts are shown in this catalog, TFPP does not guarantee the availability of the items. The parts shown in this section will be sold as long as they are available. TFPP does not have any plans to continue the production of these discontinued parts.

**Note: All Items Are Non-Returnable**

## Model B Deluge Valve (2004)

| Description | Part No. | List Price |
|---|---|---|
| **Replacement Parts for Model "B" Deluge Valve** | | |
| Priming Supply Res. 1/2" w/.125 | **92-020-1-009** | $1,225.59 |
| **Technical Data Sheet - Gem TD 117A** | | |

## Model DV-1 Deluge Valves (2007)

| Description | Part No. | List Price |
|---|---|---|
| **Replacement Part Kits for the 4" Model DV-1 Deluge Valve** | | |
| (a) **Repair Parts Kit**<br>Includes: 1-Clapper Facing, 1-Diaphragm, 1-Handhole Cover Gasket | **92-470-1-101** | $578.15 |
| Replacement Part Kits for the 4" Model DV-1 Deluge Valve | **92-514-1-403** | POA |
| **Replacement Part Kits for the 6" Model DV-1 Deluge Valve** | | |
| (a) **Repair Parts Kit**<br>Includes: 1-Clapper Facing, 1-Diaphragm, 1-Handhole Cover Gasket | **92-470-1-102** | $641.07 |
| Replacement Part Kits for the 6" Model DV-1 Deluge Valve | **92-516-1-602** | POA |
| 6" Model DV-1 Deluge Valve Clapper Facing | **92-470-1-032** | $37.89 |
| **Technical Data Sheet - TFP1330** | | |

## Star - Model A-1, Dry Pipe Valves (2002)

| Description | Part Number | List Price |
|---|---|---|
| **Star 4" Model A-1 Dry Pipe Valve Replacement Parts, Flange x Groove** | | |
| Complete Kit:<br>Including: Cover Gasket, Clapper Diaphragm, Seat O-Ring (Inner), Seat O-Ring (Outer) | **1667-41** | $2,098.00 |

## Model RV-1 Pressure Relief Valve

| Description | Part Number | List Price |
|---|---|---|
| Replacement Parts Pilot valve RV-1 | **92-572-2-200** | POA |
| **Technical Data Sheet: TFP1585** | | |

## General Air Products (2022)

| Description | Part Number | List Price |
|---|---|---|
| **International Oil Less Air Compressor** | | |
| OL750-25AC-50HZ | **60031P** | $7,420.04 |
| OL2870-150AC-50HZ | **60035P** | $19,164.18 |

*See latest Technical Data Sheets for specific Approvals, Listings, Design Parameters & available finishes.*

## Discontinued Sprinklers

The following repair parts are applicable to items that have been discontinued and are no longer available. Although the parts are shown in this catalog, TFPP does not guarantee the availability of the items. The parts shown in this section will be sold as long as they are available. TFPP does not have any plans to continue the production of these discontinued parts.

**Note: All Items Are Non-Returnable**

## CC1 Combustible Concealed Upright Sprinklers K=2.8, 1/2" N.P.T. (2022)

SIN TY1189

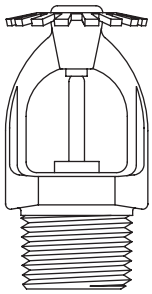

| C.O. | No. | Model | Finish | Temp. | List Price |
|---|---|---|---|---|---|
| | **50-300-1-175** | CC1 | Brass | 175°F (79°C) | $170.67 |
| | **Sprinkler Wrench** | | | | |
| | **56-000-1-106** | W-Type 20 Combination Wrench | | | $427.62 |

**Technical Data Sheet: TFP630**



*See latest Technical Data Sheets for specific Approvals, Listings, Design Parameters & available finishes.*

## Discontinued Sprinklers

The following repair parts are applicable to items that have been discontinued and are no longer available. Although the parts are shown in this catalog, TFPP does not guarantee the availability of the items. The parts shown in this section will be sold as long as they are available. TFPP does not have any plans to continue the production of these discontinued parts.

**Note: All Items Are Non-Returnable**

*See latest Technical Data Sheets for specific Approvals, Listings, Design Parameters & available finishes.*

## Potter Electric

| Description | Part Number | List Price |
|---|---|---|
| **Waterflow Switches** | | |
| VS-SP 1"-1-½" WFD (without retard) | **2447** | $649.44 |
| VSR-S 1"-2" WFS | **24148** | $865.36 |
| VSR-SG | **26144** | $1,009.69 |
| VSR-F 2" WFD | **24110** | $809.59 |
| VSR-F 2½" WFD | **24111** | $837.09 |
| VSR-F 3" WFD | **24112** | $837.09 |
| VSR-F 3 ½" WFD | **24113** | $830.26 |
| VSR-F 4" WFD | **24114** | $790.75 |
| VSR-F 5" WFD | **24115** | $790.75 |
| VSR-F 6" WFD | **24116** | $821.59 |
| VSR-F 8" WFD | **24117** | $895.67 |
| VSR 10" WFD | **24118** | $2,466.92 |
| **Copper Waterflow Switches** | | |
| VSR-C 2" | **24158** | $1,685.95 |
| VSR-C 2½" | **24159** | $1,769.01 |
| VSR-C 4" | **24184** | $1,685.95 |
| **Auto Test Switches and Accessories** | | |
| Battery 8AH 12V | **2656** | $258.58 |
| **Accessories for Waterflow Switches** | | |
| WFSR-F Flow Switch | **2640** | $3,332.96 |
| Extra Switch for VS-SP | **2454** | $458.79 |
| WLS Water Level Switch, Steel Tank; (LATIN AMER.) | **1010117** | $5,991.86 |
| BVL Bleeder Valve | **2483** | $341.63 |
| **Replacement Parts for Waterflow Switches** | | |
| Paddle 2" Manifold (For MOD 513) | **97109900** | $33.60 |
| Paddle 2-½" Manifold (For MOD 513) | **97108600** | POA |
| Paddle 3" Manifold (For MOD 513) | **97110000** | $33.60 |
| Paddle 6" Manifold (For MOD 513) | **97110600** | $33.60 |
| **Tamper Switches - OS&Y** | | |
| OSYSU-1 | **2414** | $520.28 |
| OSYSU-2 | **2412** | $733.78 |
| OSYSU-2CRH Supervisory Switch | **2494** | $950.89 |
| PTS-C (Plug type) | **24100** | $1,025.09 |
| Tamper Switch OS&Y RBVS Retrofit Ball Valve Switch | **1000065** | $988.24 |
| **Tamper Switches - Butterfly/PIV** | | |
| PCVS-2 Sets DPDT | **2419** | $619.89 |
| PCVS-2CRH Supervisory Switch | **2495** | $723.66 |
| **Pressure Switches** | | |
| PS10-2 | **25710** | $669.46 |
| PS40-1 | **25720** | $589.90 |
| PS40-2 | **25730** | $699.60 |
| PS100-2 | **23860** | $1,250.12 |
| PS120-1 | **25760** | $814.12 |
| PS120-2 | **23450** | $1,295.65 |

## Potter Electric

| Description | Part Number | List Price |
|---|---|---|
| **Explosion Proof Switches** | | |
| VSRF-EX 3" | **2396** | $10,562.59 |
| VSRF-EX 4" | **2472** | $9,765.76 |
| VSRF-EX 6" | **2477** | $9,765.76 |
| VSRF-EX 8" | **2478** | $8,571.97 |
| PS10-2A-EX | **2471** | $3,109.85 |
| PS40-2A-EX | **2473** | $3,109.85 |
| PIVSU-EX | **2487** | $4,056.23 |
| **Electric Bells - 120 Volts A.C.** | | |
| 6" 120 Volts A.C. | **2440** | $259.73 |
| 8" 120 Volts A.C. | **2441** | $257.30 |
| 10" 120 Volts A.C. | **2442** | $327.52 |
| **Electric Bells - 24 Volts A.C.** | | |
| 6" 24 Volts A.C. | **2387** | $193.02 |
| 8" 24 Volts A.C. | **2670** | $711.81 |
| **Weatherproof Back Box** | | |
| Weather-proof Back Box | **2443** | $97.03 |
| **Electric Bells - 12 Volts D.C.** | | |
| 6" 12 Volts D.C. | **2428** | $281.58 |
| **Electric Bells - 24 Volts D.C.** | | |
| 6" 24 Volts D.C. | **2446** | $178.99 |
| 8" 24 Volts D.C. | **2451** | $242.66 |
| 10" 24 Volts D.C. | **2444** | $254.68 |
| **Release Panel** | | |
| 4-Zone Releasing Control Cabinet Model 4410RC | **20235** | $5,417.74 |
| **Batteries for Release Panel** | | |
| 8.0 Amp Hour Batteries BT-80 | **2656** | $258.58 |
| 12.0 Amp Hour Batteries BT-120 | **20128** | $452.30 |
| **Accessories for Release Panel** | | |
| EOL Indiv Resist For PFC4410RC | **20129** | $52.13 |
| EOL Resistor/Diode Assy | **20130** | $64.82 |
| CA2Z Module (PFC 4410) | **20134** | $368.84 |
| CAM Class Indicating App Circuit Module for PFC4410RC | **20036** | $242.77 |
| Single DPDT Relay In Enclosure, Option For Panel 4410 | **MR201C** | $212.25 |
| **Accessories** | | |
| ARM-1 Aux Relay Module | **20133** | $594.76 |
| WLS Water Level Switch, Steel Tank; (Latin America) | **1010117** | $5,991.86 |

## Potter Heat Detectors

| Description | Part Number | List Price |
|---|---|---|
| CR-200W Heat Detector | **26590** | $120.78 |
| CF-135W Heat Detector | **26600** | $117.13 |
| **Temperature Switch** | | |
| TTS-S Tank Temperature Switch | **2469** | $5,070.42 |



*See latest Technical Data Sheets for specific Approvals, Listings, Design Parameters & available finishes.*

## Solenoid Valves

| Description | Part Number | List Price |
|---|---|---|
| **Ordinary Location** | | |
| 1/2" Solenoid Valve 110 VAC | **52-287-1-110** | $2,522.04 |
| 1/2" Solenoid Valve 24 VDC | **52-287-1-024** | $2,903.64 |
| 1/2" Solenoid Valve 24 V | **52-287-1-124** | $4,606.11 |
| 1/2" Solenoid Valve 48 VDC | **52-287-1-048** | $9,285.02 |
| 1/2" Solenoid Valve 125 VDC | **52-287-1-125** | $4,050.76 |
| 1/2" Solenoid Valve 250 VDC | **52-287-1-015** | $2,120.91 |
| 1" Solenoid Valve 24 VDC | **52-287-1-324** | $10,547.15 |
| **Hazardous Location** | | |
| 1/2" Explosion-proof Solenoid Valve 110 VAC | **52-287-1-210** | $4,250.32 |
| 1/2" Explosion-proof Solenoid Valve 24 VDC | **52-287-1-224** | $4,645.93 |

## Horn Strobes

| Description | Part Number | List Price |
|---|---|---|
| SH-120R Wall MT Select-a-Strobe | **2800** | $642.38 |

## General Air Products

| Description | Part Number | List Price |
|---|---|---|
| **Automatic Air Supply** | | |
| G16AC812-50HZ 220V (trim 521501000) | **52-150-1-003** | $16,025.97 |
| **Air Compressors: Base Mount – Single Phase** | | |
| L200-33-A | **50024** | $9,745.82 |
| L290-50-A | **50232** | $2,243.54 |
| L365-75-A | **50233** | $2,382.50 |
| L425-100-A | **50027** | $9,077.50 |
| L620-100-A | **50234** | $2,815.60 |
| L900-150-A | **50235** | $2,764.85 |
| L1300-300-A | **60232** | $18,521.02 |
| L2500-500-A | **50238** | $6,344.16 |

## General Air Products

| Description | Part Number | List Price |
|---|---|---|
| **Air Compressors: Base Mount – Three Phase** | | |
| L425-100-B | **50037** | $8,082.35 |
| L620-100-B | **50038** | $9,300.11 |
| L900-150-B | **50239** | $2,670.59 |
| L1600-300-B | **60235** | $30,249.69 |
| **Air Compressors: Riser Mounted Oil-Less (Includes Stop - Start)** | | |
| OLR12016AC 60HZ (125 Gallon) | **60001R** | $4,717.07 |
| OLR25033AC 60HZ (250 Gallon) | **60002R** | $6,027.93 |
| OLR40050AC 60HZ (365 Gallon) | **60041R** | $8,988.60 |
| OLR43075AC 60HZ (430 Gallon) | **60004R** | $11,157.88 |
| OLR615100AC 60HZ (615 Gallon) | **60281R** | $44,791.07 |
| OL615-100BC (615 Gallon) | **60279** | $50,499.03 |
| OLR915150AC 60HZ (915 Gallon) | **60282R** | $56,867.43 |
| OLR1225200AC 60HZ (1,225 Gallon) | **60283R** | $61,702.69 |
| **Air Compressors: Tank Mounted Oil-Less (Includes Stop - Start)** | | |
| OLT12516AC 60HZ (125 Gallon) | **60236T** | $16,704.47 |
| OLT25033AC 60HZ (250 Gallon) | **60237T** | $17,852.27 |
| OLT40050AC 60HZ (365 Gallon) | **60238T** | $13,592.60 |
| OLT43075AC 60HZ (430 Gallon) | **60239T** | $16,198.04 |
| OLT615100AC 60HZ (615 Gallon) | **60285T** | $20,055.81 |
| OLT915150AC 60HZ (915 Gallon) | **60287T** | $24,711.54 |
| OLT1225200AC 60HZ (1,225 Gallon) | **60288T** | $28,635.87 |
| **Air Compressors: Tank Mounted Single Phase (Includes Stop - Start)** | | |
| LT200-33-A | **50047** | $11,186.15 |
| LT290-50-A | **50251** | $30,287.44 |
| LT365-75-A | **50252** | $32,968.29 |
| LT425-100-A | **50050** | $11,090.05 |
| LT620-100-A | **50253** | $12,793.62 |
| LT900-150-A | **50254** | $13,353.59 |
| LT1300-300-A | **60251** | $16,370.10 |
| LT1600-300-A | **60253** | $26,496.95 |
| LT2000-500-A | **60029** | $100,739.20 |

*See latest Technical Data Sheets for specific Approvals, Listings, Design Parameters & available finishes.*

## General Air Products

| Description | Part Number | List Price |
|---|---|---|
| **Air Compressors: Tank Mounted Three Phase (Includes Stop - Start)** | | |
| LT200-33-B | **50057** | $13,401.52 |
| LT900-150-B | **50260** | $13,736.38 |
| LT1300-300-B | **60252** | $15,837.54 |
| LT2000-500-B | **60038** | $74,220.57 |
| LT2500-500-B | **50261** | $30,684.33 |
| **Oil Less Air Compressor, High Pressure** | | |
| OLR25033AC-HP | **60002PHR** | $7,633.52 |
| **Oil Less Air Compressor,** | | |
| OLR43075AC 60 HZ | **60004R** | $11,157.88 |
| **International Oil Less Air Compressor** | | |
| OLR121016AC-50HZ | **60030R** | $19,616.56 |
| OLT12016AC-50HZ | **61236T** | $32,418.73 |
| OLR25033AC-50HZ | **60031R** | $23,082.30 |
| OLR40050AC-50HZ | **60032R** | $29,954.99 |
| OLT40050AC-50HZ | **60061T** | $13,747.57 |
| OLR43075AC-50HZ | **60033R** | $34,996.48 |
| OLR615100AC-50Hz | **61237R** | $45,005.07 |
| OLR915150AC-50HZ | **60035R** | $71,539.31 |
| **Magnetic Line Starter - Single Phase (Need HP and Voltage to Order)** | | |
| MGOOA | **50084** | $7,065.10 |
| MGXOA | **50086** | $2,642.82 |
| MG15A | **50092** | $5,877.93 |
| **Magnetic Line Starter - Three Phase (Need HP and Voltage to Order)** | | |
| MGOOB | **50075** | $3,882.84 |
| MGXOB | **50093** | $3,289.55 |
| **Riser Mount Kits - Universal Bracket** | | |
| RMK 16150 | **50082** | $1,198.16 |

## General Air Products

| Description | Part Number | List Price |
|---|---|---|
| **Dry Air Pacs - F.O.B. Factory Direct (Need Voltage to Order)** | | |
| DAP500A | **50264** | $99,717.50 |
| DAP500B | **50265** | $76,528.77 |
| DAP1000B | **50267** | $82,440.81 |
| DAP2000B | **50269** | $87,817.47 |
| **Accessories** | | |
| AD3400 Desicant Dryer | **50076** | $2,691.83 |
| 34006 Desicant Replacement | **60010** | $735.81 |
| F3500 Coalescing Filter | **50077** | $1,839.68 |
| Vibration Pad (4 Pack) | **50078** | $650.97 |
| P1202MP Flex Hose | **60247** | $722.24 |
| General Blower Oil for Air Compressors - 1 Quart | **60249** | $95.45 |
| OLR-TK Riser Tank Kit Bracket | **50081** | $2,458.45 |
| **Air Compressor Pressure Switches** | | |
| SWP60103 / 69HA3 | **50070** | $1,263.09 |
| SWP60401U/69WA4Z | **50072** | $684.04 |
| SWP60304/69WB3 | **50080** | $965.92 |
| SWP60601U, OL Plus Series ¾ TO 2 HP | **60259** | $1,028.78 |
| **Air Compressor Accessories** | | |
| ¼" Check Valve #CV2525X3 (3 PACK) For GB Air Compressor | **51068** | POA |
| ¼ x ½ Check Valve #CV2550X3, 3 pack for GB Air Compressor | **51067** | $259.68 |
| ¼" Check Valve for D-800, #VCKA3850 | **50368** | POA |



*See latest Technical Data Sheets for specific Approvals, Listings, Design Parameters & available finishes.*

## Thermocable LHD - Linear Heat Detection Wire
## PVC Jacket (Vinyl)

| Description | 500' Spool | |
|---|---|---|
| | Part Number | List Price per Spool |
| 155°F / 68°C Red | TC155 | $5,527.17 |
| 155°F / 68°C Red with Guide Wire* | TC155G | $6,633.24 |
| 155°F / 68°C Nylon | TC155N | $6,633.24 |

**Notes:**

*GuideWire should be installed using eyebolts for support every 15 feet (4.5m) to 20 feet (6.0m).
ThermoCable with GuideWire is only available in 500' spool lengths.
ThermoCable is available in 500' or 3000' spool lengths.

## Mounting Clips and Clamps
## Temperatures -40°F to 185°F (-40°C to 85°C)

| Description | Part Number | List Price | Qty. |
|---|---|---|---|
| **Cable Clip, Nylon 6.6** -3/16" (4.8mm) mounting hole | TC1012C | $686.90 | pack(100) |
| **Push Pin** -Secures through 3/16" (4.8mm) mounting hole<br>Secures Cable Clip TC1012 to Beam Clamps and Cable Tray Mounting Clips | TC1034Q | $230.35 | pack(25) |
| **Cable Clip, Zinc Plated**, 1/4°± (6.4mm) mounting hole | TC1013C | $761.62 | pack(100) |
| **Beam Clamp, Zinc Plated Steel**<br>Designed for material thickness up to 7/8" (22mm)<br>TC1012 Cable Clip and TC1030 Push Pin required for installation | TC1015L | $1,373.81 | pack(50) |

## Cable Connecting Accessories

| DESCRIPTION | Part Number | List Price | Qty. |
|---|---|---|---|
| **Cable Strain Relief Connector**<br>Required for securing ThermoCable penetrations through wall of J-Box/ELR-Box and HDJ-Box/HDELR-Box. | TC100 | $91.98 | each |

## Cable Splicing Accessories

| DESCRIPTION | Part Number | List Price | Qty. |
|---|---|---|---|
| Sealant Tape, Must be used for all splices | TC1006 | $429.76 | Roll |
| Splicing Tape, Red | TC1008 | $123.16 | Roll |
| Low Temperature Splicing Tape, Black | TC1010 | $119.98 | Roll |

*See latest Technical Data Sheets for specific Approvals, Listings, Design Parameters & available finishes.*

## Nitrogen Generators - Includes Generator Cabinet and Integral Compressor

| Type | Model | Total System Capacity (gal.) | Single System Capacity at 20 psig - gal | Voltage (All 60 Hz) | Part No. | List Price |
|---|---|---|---|---|---|---|
| Wall Mount | NG-2 100 | 675 | 530 | 120 VAC / Single Phase | **NG2100** | $53,410.95 |
| | NG-2 250 | 950 | 530 | 120 VAC / Single Phase | **NG2250** | $65,489.53 |
| | NG-2 500 | 2,000 | 1,800 | 120 VAC / Single Phase | **NG2500** | $91,136.74 |
| | NG-2 1100 | 3,500 | 1,800 | 120 VAC / Single Phase | **NG21100** | $114,613.63 |

## Nitrogen Generators - Generator Cabinet and Compressor Sold Separately

| Type | Model | Total System Capacity (gal.) | Single System Capacity at 20 psig - gal | Voltage (All 60 Hz) | Part No. | List Price |
|---|---|---|---|---|---|---|
| Generator Cabinet | NG-2 1150 | 6,500 | 2,300 | 120 VAC / Single Phase | **NG21150** | $99,609.95 |
| | NG-2 1500 | 11,000 | 1,440 | 120 VAC / Single Phase | **NG21500** | $136,209.58 |
| | NG-2 2000 | 18,500 | 2,025 | 120 VAC / Single Phase | **NG22000** | $209,799.68 |
| | NG-2 3000 | 25,000 | 2,900 | 120 VAC / Single Phase | **NG23000** | $244,388.63 |
| **Replacement Filters** | | | | | | |
| Filters | For NG-2 100/250/500/1100 | | | | **TNGFLTW** | $2,512.30 |
| | For NG-2 1150 to 3000 | | | | **TNGFLTS** | $2,060.33 |

*Contact your TYCO representative for different voltage options for generators and/or compressors.

**Technical Data Sheets: TFP1254 (Wall-Mount), TFP1255 (Stand-Alone)**



*See latest Technical Data Sheets for specific Approvals, Listings, Design Parameters & available finishes.*

Section 16 Specialty Items
Section 18 Grooved Product
Section 20 Miscellaneous
Section 21 Electrical
Section 22 Corrosion Solutions
Section C Valves & Hose Equipment
Section D Backflow
Section F Pipe & Accessories
Section J Lubricants
Section K Misc.

## Oxygen Removal Vents - Dry/Preaction Systems

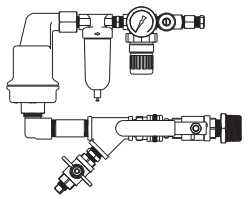

| Model | Shut-Off after Nitrogen Fill | Voltage* | Part No. | List Price |
|---|---|---|---|---|
| TAV-D | Manual | -- | **TAVD02** | $2,842.90 |
| TSV-D | Automatic | 120 VAC / 60 Hz | **TSVD02** | $6,320.16 |

**Replacement Filter**

| Description | Part No. | List Price |
|---|---|---|
| Replacement Filter for TAVD01, TSVD01 | **TVDFLT** | $199.28 |
| Replacement Filter for TAVD02, TSVD02 | **TVDFLT2** | $199.28 |

**Oxygen Vents**

| | | |
|---|---|---|
| #8 Orifice Oxygen Vent for use with TAV-D, TSV-D Vents. | **TNRP051** | $170.74 |
| #10 Orifice Oxygen Vent for use with TAV-D, TSV-D Vents. | **TNRP052** | $199.89 |
| #12 Orifice Oxygen Vent for use with TAV-D, TSV-D Vents. | **TNRP053** | $188.79 |
| #16 Orifice Oxygen Vent for use with TAV-D, TSV-D Vents. | **TNRP054** | $192.21 |
| #20 Orifice Oxygen Vent for use with TAV-D, TSV-D Vents. | **TNRP055** | $243.05 |
| #25 Orifice Oxygen Vent for use with TAV-D, TSV-D Vents. | **TNRP056** | $261.53 |
| #29 Orifice Oxygen Vent for use with TAV-D, TSV-D Vents. | **TNRP057** | $261.84 |
| #35 Orifice Oxygen Vent for use with TAV-D, TSV-D Vents. | **TNRP058** | $260.95 |
| #40 Orifice Oxygen Vent for use with TAV-D, TSV-D Vents. | **TNRP059** | $261.21 |

*Contact your TYCO representative for different voltage options for TSV-D.

**Technical Data Sheets: TFP1262 (TAV-D), TFP1263 (TSV-D)**

## Monitoring - Nitrogen/Oxygen Concentration

| Model | Technical Data Sheet | Description | Part No. | List Price |
|---|---|---|---|---|
| THGA | **TFP1267** | Handheld Gas Analyzer | **THGA01** | $2,021.18 |
| TSGA | **TFP1270** | Electronic Gas Analyzer | **TSGA01** | $14,766.44 |

## Model TVC-2 and TVC-6 Advanced Vent Controllers

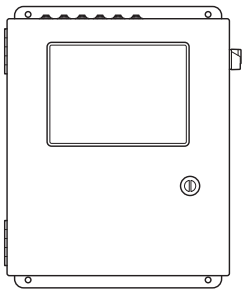

| Model | Vents | Voltage* | Part No. | List Price |
|---|---|---|---|---|
| TVC-2 | 2 Vents | 120-240VAC/Single phase/50-60 Hz | **TVC2** | $25,659.63 |
| TVC-6 | 6 Vents | 120-240VAC/Single phase/50-60 Hz | **TVC6** | $33,737.58 |

**Manual Vents**

| Description | Part No. | List Price |
|---|---|---|
| Manual Vent For TVC Orifice #5 | **TAVDQ05** | $5,640.26 |
| Manual Vent For TVC Orifice #8 | **TAVDQ08** | $5,640.26 |
| Manual Vent For TVC Orifice #10 | **TAVDQ10** | $5,640.26 |
| Manual Vent For TVC Orifice #12 | **TAVDQ12** | $5,640.26 |
| Manual Vent For TVC Orifice #16 | **TAVDQ16** | $5,640.26 |
| Manual Vent For TVC Orifice #20 | **TAVDQ20** | $5,640.26 |

**Technical Data Sheets: TFP1260**

*See latest Technical Data Sheets for specific Approvals, Listings, Design Parameters & available finishes.*

## Model TILD - Monitoring – TYCO In-Line Corrosion Detector

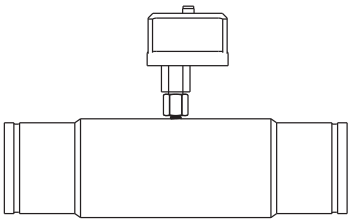

| Pipe Diameter | Pipe Material | Pipe Schedule | Part No. | List Price |
|---|---|---|---|---|
| 1-1/4" | Black Steel | 10 | TILD1310B | $8,626.62 |
| | | 40 | TILD1340B | $8,626.62 |
| | Galvanized | 10 | TILD1310G | $8,626.62 |
| | | 40 | TILD1340G | $8,626.62 |
| 1-1/2" | Black Steel | 10 | TILD1510B | $8,626.62 |
| | | 40 | TILD1540B | $8,626.62 |
| | Galvanized | 10 | TILD1510G | $8,626.62 |
| | | 40 | TILD1540G | $8,626.62 |
| 2" | Black Steel | 10 | TILD2010B | $8,626.62 |
| | | 40 | TILD2040B | $8,626.62 |
| | Galvanized | 10 | TILD2010G | $8,626.62 |
| | | 40 | TILD2040G | $8,626.62 |
| 2-1/2" | Black Steel | 10 | TILD2510B | $8,626.62 |
| | | 40 | TILD2540B | $8,626.62 |
| | Galvanized | 10 | TILD2510G | $8,626.62 |
| | | 40 | TILD2540G | $8,626.62 |
| 3" | Black Steel | 10 | TILD3010B | $8,626.62 |
| | | 40 | TILD3040B | $8,626.62 |
| | Galvanized | 10 | TILD3010G | $8,626.62 |
| | | 40 | TILD3040G | $8,626.62 |
| 4" | Black Steel | 10 | TILD4010B | $11,200.55 |
| | | 40 | TILD4040B | $7,724.45 |
| | Galvanized | 10 | TILD4010G | $7,724.45 |
| | | 40 | TILD4040G | $7,724.45 |
| 6" | Black Steel | 10 | TILD6010B | $10,382.74 |
| | | 40 | TILD6040B | $10,382.74 |
| | Galvanized | 10 | TILD6010G | $10,382.74 |
| | | 40 | TILD6040G | $10,382.74 |
| 8" | Black Steel | 10 | TILD8010B | $16,677.87 |
| | | 40 | TILD8040B | $16,677.87 |
| | Galvanized | 10 | TILD8010G | $16,677.87 |
| | | 40 | TILD8040G | $16,677.87 |

**Technical Data Sheet: TFP1261**



*See latest Technical Data Sheets for specific Approvals, Listings, Design Parameters & available finishes.*

Section 16 Specialty Items
Section 18 Grooved Product
Section 20 Miscellaneous
Section 21 Electrical
Section 22 Corrosion Solutions
Section C Valves & Hose Equipment
Section D Backflow
Section F Pipe & Accessories
Section J Lubricants
Section K Misc.

## Wet Pipe Air Venting / Wet Pipe Nitrogen Inerting (WPNI)

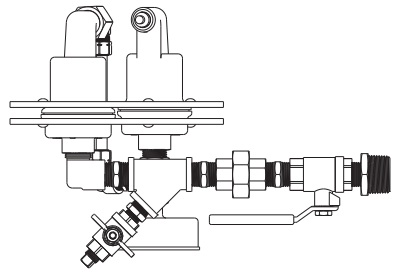

| Model | Technical Data Sheet | Description | Part No. | List Price |
|---|---|---|---|---|
| TAV-W | **TFP1264** | Automatic Air Vent | **TAVW01** | $5,642.48 |
| TAV-WN | **TFP1265** | Automatic Air Vent - WPNI | **TAVWN01** | $6,906.62 |
| TNIP | | Nitrogen Inerting Port | **TNIP01** | $945.04 |
| TRIS | | Remote Inerting Station | **TRIS01** | $5,232.53 |
| TNIK | **TFP1266** | Nitrogen Inerting Kit | **TNIK01** | $4,183.55 |
| TNST-200 | **TFP1272** | Nitrogen Storage Tank - 200 gal. | **TNST01** | $13,909.94 |
| TNIM01 | **TFP1268** | Nitrogen Inerting Manifold | **TNIM01** | $5,440.46 |

## Dry Pipe Nitrogen Inerting

| Model | Technical Data Sheet | Description | Part No. | List Price |
|---|---|---|---|---|
| TGSP | **TFP1267** | Gas Sampling Port | **TGSP01** | $289.18 |
| TGSK | | Gas Sampling Kit | **TGSK01** | $1,156.71 |
| TNIC | **TFP1269** | Nitrogen Interface Controller | **TNIC01** | $23,858.21 |

*See latest Technical Data Sheets for specific Approvals, Listings, Design Parameters & available finishes.*

## Babbitt Valve Chainwheels

### Cast Iron Standard Chainwheel

| Item No. | Hand Wheel Size | Part Number | List Price |
|---|---|---|---|
| 0 | 2" to 4" | **5036** | $714.74 |
| 1 | 4 1/4" to 5 3/4" | **5037** | $840.67 |
| 1.5 | 6" to 7 1/2" | **5031** | $1,330.91 |
| 2 | 7 3/4" to 9" | **5038** | $1,291.62 |
| 2.5 | 9 1/4" to 12 1/2" | **5039** | $1,853.64 |
| 3 | 12 3/4" to 15 1/2" | **5040** | $2,070.15 |
| 3.5 | 15 3/4" to 19" | **5041A** | $3,132.97 |
| 4 | | **5042** | POA |
| 4.5 | | **5043** | POA |
| 5 | | **5044** | POA |

### Hot Dipped Galvanized Standard Chain

| Item No. | Part Number | List Price Per Foot |
|---|---|---|
| 1 to 2 | **5030** | $25.68 |
| 2.5 to 3.5 | **5032** | $42.95 |

## United Brass Bronze Valves

| Description | Part Number | List Price |
|---|---|---|
| **Globe Valves** | | |
| 3-Way 1/4" | **2228** | $89.16 |
| 1/2" Globe | **2222** | $157.04 |
| 3/4" Globe | **2223** | $189.25 |
| 1" Globe | **2224** | $250.76 |
| 1 1/4" Globe | **2225** | $403.56 |
| 1 1/2" Globe | **2226** | $558.80 |
| 2" Globe | **2227** | $788.60 |
| **Swing Checks** | | |
| 1/2" | **2240** | $165.44 |
| 3/4" | **2241** | $182.62 |
| 1" | **2242** | $258.09 |
| 1 1/4" | **2243** | $369.27 |
| 1 1/2" | **2244** | $706.20 |
| 2" | **2245** | $586.78 |
| **Ball Valves** | | |
| 3/4" | **2281** | $278.31 |
| 1" | **2284** | $249.07 |
| 1 1/4" | **2296** | $553.67 |
| 1 1/2" | **2276** | $716.22 |
| **Angle Valves** | | |
| 1/2" | **2202** | $116.53 |
| 3/4" | **2203A** | $126.39 |
| 1" | **2204A** | $265.19 |
| 1 1/4" | **2205A** | $307.39 |
| 1 1/2" | **2206A** | $413.88 |
| 2" | **2207** | $696.77 |
| **OS&Y Valves** | | |
| 1" | **2272** | $1,011.26 |
| 1 1/4" | **2273** | $1,103.18 |
| 1 1/2" | **2274** | $1,484.38 |
| 2" | **2275** | $2,562.97 |



*See latest Technical Data Sheets for specific Approvals, Listings, Design Parameters & available finishes. Sprinkler heads & escutcheons are priced separately unless otherwise noted. Items marked "C.O." are made to order and may require longer delivery times.*

Section 16 Specialty Items
Section 18 Grooved Product
Section 20 Miscellaneous
Section 21 Electrical
Section 22 Corrosion Solutions
Section C Valves & Hose Equipment
Section D Backflow
Section F Pipe & Accessories
Section J Lubricants
Section K Misc.

## Lansdale Powerball 300 Valves

| Description | Part Number | List Price |
|---|---|---|
| **Slow Close Valve with Integral Tamper Switch (300psi)** | | |
| 1" LPBT | **51009A** | $3,028.17 |
| 1 1/4" LPBT | **51010A** | $1,653.11 |
| 1 1/4" LPBG Grooved | **51027A** | $1,495.81 |
| 1 1/2" LPBT | **51011A** | $408.10 |
| 1 1/2" LPBG Grooved | **51024A** | $1,891.19 |
| 2" LPBT | **51012A** | $461.79 |
| 2" LPBG Grooved | **51021A** | $1,418.10 |
| 2 1/2" LPBT | **51013A** | $796.03 |

## Trim Valves

| Description | Part Number | List Price |
|---|---|---|
| **Test Valves** | | |
| 1/4" Gauge Test Valve | **46-005-1-002** | $86.47 |
| 1/4" Gauge Test Valve - 300psi | **46-005-1-003** | $42.29 |
| **Globe Valves** | | |
| 3-Way 1/4" | **23539** | $51.92 |
| 1/2" Globe | **23540** | $85.86 |
| 1/2" Globe | **46-047-1-004** | $147.96 |
| 3/4" Globe | **23541** | $83.16 |
| 1" Globe | **23542** | $113.05 |
| 1 1/4" Globe | **23543** | $184.10 |
| 1 1/2" Globe | **23544** | $255.62 |
| 2" Globe | **23545** | $350.68 |
| **Swing Checks** | | |
| 1/2" | **23552** | $43.70 |
| 1/2" Bronze | **46-049-1-004** | $244.43 |
| 3/4" | **23553** | $56.37 |
| 1" | **23554** | $87.72 |
| 1 1/4" | **23555** | $149.27 |
| 1 1/2" | **23556** | $173.97 |
| 2" | **23557** | $274.20 |
| **Ball Valves** | | |
| 1/2" | **23533** | $59.88 |
| 1/2" | **46-050-1-004** | $144.50 |
| 1" | **23535** | $95.69 |
| 1 1/4" | **23536** | $161.41 |
| 1 1/2" | **23537** | $247.52 |
| 2" | **23538** | $401.49 |
| **Angle Valves** | | |
| 1/4" Bronze | **46-048-1-002** | $424.94 |
| 1/2" | **23546** | $53.30 |
| 1" | **23548** | $150.43 |
| 1" Bronze | **46-048-1-006** | $838.09 |
| 1 1/4" Bronze | **46-048-1-007** | $2,170.04 |
| 1 1/2" | **23550** | $281.92 |
| 2" | **23551** | $357.03 |
| 2" Bronze | **46-048-1-009** | $1,378.09 |

*'See latest Technical Data Sheets for specific Approvals, Listings, Design Parameters & available finishes. Sprinkler heads & escutcheons are priced separately unless otherwise noted. Items marked "C.O." are made to order and may require longer delivery times.*

## Hose Valves & FDC's

| Description | Part Number | List Price |
|---|---|---|
| **Hose Valves** | | |
| 2 1/2" FT X MT Angle | **23482** | $749.17 |
| 2 1/2" Angle Hose Valve Grooved x MNST | **23483** | $973.97 |
| 1 1/2" Cap with Brass Chain | **23529** | $64.00 |
| 2 1/2"x1 1/2" Brass Reducing Adapter | **23530** | $111.09 |
| **Storz Equipment** | | |
| Storz 4" x 4" Straight Connection Kit | **23564** | $1,128.41 |
| Storz 4" x 5" Straight Connection Kit | **23566** | $1,969.54 |
| Storz 4" x 4" 30-degree Connection Kit | **23567** | $1,278.67 |
| Storz 4" x 5" 30-degree Connection Kit | **23568** | $2,952.44 |
| **Fire Department Connections** | | |
| Fire Dept (Alum.) Sign Rect. 8" x 4" | **23478** | $60.47 |
| Straight - 4" x 2 1/2" | **23511** | $595.71 |
| 90° Angle 4" x 2 1/2" | **23515** | $791.96 |
| Red Plastic Caps w/ Bolt & Nut (pair) | **23512** | $12.92 |
| Aluminum Caps w/ Bolt & Nut (pair) | **23514** | $32.39 |
| **Residential Fire Dept Connections** | | |
| 1 1/2" Residential Fire Dept Connection | **23516** | $350.23 |

## Croker Standpipe and Hose Equipment

| Description | Part Number | List Price |
|---|---|---|
| **#3421, 2 1/2" Double Jacket Coupled** | | |
| 50' | **27690** | $5,566.09 |
| **Pressure Restricting Hose Valves** | | |
| #5050 1 1/2" Angle, Female x Male | **27960** | $2,076.67 |
| **Hose Rack Nipples** | | |
| Rack Nipple NST CB 1 1/2" | **2740** | $299.31 |
| Rack Nipple NST CB 2 1/2" | **2741** | $998.08 |
| **Fire Department Inlet Connections – Single Inlet** | | |
| #6341 2 1/2" with Plate & Plug | | |
| Rough Brass | **28155** | $552.50 |
| **Fire Department Inlet Connections – Projecting Type** | | |
| #6420 4"x 2 1/2"x 2 1/2" Double Clapper, Angle | | |
| Rough Brass | **28225** | $1,406.77 |
| #6760 4" Round Wall Plate | | |
| Rough Brass | **28255** | $286.86 |
| #6766 4" Round Wall Plate, Aluminum | **28285** | $48.30 |
| #6747 2 1/2" Plug & Chain, | | |
| Rough Brass | **28295** | $159.54 |
| **Straight SIAM** | | |
| #6405 4" x 2 1/2" x 2 1/2" | | |
| Polished Brass | **28200** | $2,483.92 |



*See latest Technical Data Sheets for specific Approvals, Listings, Design Parameters & available finishes. Sprinkler heads & escutcheons are priced separately unless otherwise noted. Items marked "C.O." are made to order and may require longer delivery times.*

## AGF's

| Description | Part Number | List Price |
|---|---|---|
| **#1000 AGF** | | |
| 3/4" x 1/2" Test & Drain | **20305** | $1,260.29 |
| 1" x 7/16" Test & Drain | **20307** | POA |
| 1" x 1/2" Test & Drain | **20287** | $1,361.40 |
| 1 1/4" x 1/2" Test & Drain | **20291** | $1,257.61 |
| **#1011 AGF** | | |
| 1" Test & Drain | **20292** | $1,472.50 |
| 2" Test & Drain | **20288** | $2,454.88 |
| **#1011 AGF with Pressure Relief Valve** | | |
| 3/4" x 1/2" Test & Drain with Relief Valve | **20296** | $1,035.63 |
| 1" x 17/32" Test & Drain with Relief Valve | **20311** | $1,990.62 |
| 1 1/4" x 5/8" Test & Drain | **20312** | $2,179.75 |
| 1 1/2" Test & Drain with Relief Valve | **20306** | $3,039.29 |
| 2" x 1/2" Test & Drain with Relief Valve | **20290** | $2,661.33 |
| 2" x 3/4" Test & Drain with Relief Valve | **20309** | $2,968.13 |
| **#1011T AGF with By-Pass** | | |
| 3/4" Test & Drain with By-Pass | **20300** | $2,180.68 |
| 1" Test & Drain with By-Pass | **20301** | $2,209.71 |
| 1 1/4" Test & Drain with By-Pass | **20302** | $2,495.29 |
| **#M3011A AGF with Pressure Relief Valve** | | |
| 1" Inst. Test with Pressure Relief Valve | **20294** | $640.38 |

## Guardian Standpipe and Hose Equipment

| Description | Part Number | List Price |
|---|---|---|
| **Fire Department Inlet Connections – Single Inlet** | | |
| #6014 2 1/2" RB FDC with Plate & Plug | **61550** | $760.77 |
| **Fire Department Inlet Connections – Projecting Type** | | |
| #6454 Aluminum 4" Round Wall Plate | **61625** | $60.86 |
| Note: Plates lettered Automatic Sprinkler, Standpipe, or Automatic Sprinkler and Standpipe. | | |

## Misc.

| Description | Part Number | List Price |
|---|---|---|
| **Expansion Tanks** | | |
| PLT-12-M1 Expansion Tank - 4.5 Gallon | **21535** | $1,137.29 |
| PLT-20-M1 Expansion Tank - 8.5 Gallon | **21536** | $3,111.47 |
| PLT-35-M1 Expansion Tank - 14 Gallon | **21537** | $3,819.77 |

*'See latest Technical Data Sheets for specific Approvals, Listings, Design Parameters & available finishes. Sprinkler heads & escutcheons are priced separately unless otherwise noted. Items marked "C.O." are made to order and may require longer delivery times.*

## Ames

| Description | Part Number | List Price |
|---|---|---|
| **Model Maxim M200 With FxG OS&Y Valve (Lead Free)** | | |
| 6" | **205530** | $24,488.43 |
| **Model Maxim M200 With Grooved Butterfly Valve (Lead Free)** | | |
| 4" | **205521** | $22,830.12 |
| 6" | **205531** | $31,662.80 |
| **Model Maxim M500 RPDA With FxG OS&Y Valve (GPM Meter)** | | |
| 4" | **208340** | $27,762.92 |
| **Model 2000B Brass Double Check Assembly (With Ball Valve)** | | |
| 1 1/2" | **21014** | $2,846.56 |
| 2" | **21015** | $1,897.67 |
| **Model 4000B-FP Brass Reduced Pressure Backflow Assembly (With GOBV)** | | |
| 2" | **21022FP** | $8,509.45 |
| **Maxim/Colt Air Gap Drain** | | |
| 2-1/2" - 10" | **207881** | $667.55 |
| **Model C200 Double Check Assembly (w/ FxG O.S.&Y. Valves) (Lead Free)** | | |
| 4" | **205522** | $17,335.80 |
| 8" | **207192** | $31,761.17 |
| **Model C200 Double Check Assembly (w/ Grooved Butterfly Valves) (Lead Free)** | | |
| 2 1/2" | **205503** | $12,479.63 |
| 3" | **205513** | $10,807.24 |
| 4" | **205523** | $16,790.56 |
| 6" | **205533** | $20,708.01 |
| 8" | **207193** | $34,368.12 |
| **Model C300 Double Check Detector Assembly (w/ Grooved Butterfly Valves)** | | |
| 4" | **205583** | $17,567.02 |
| **Model C400 Reduced Pressure Assembly (w/ FxG O.S.&Y. Valves) (Lead Free)** | | |
| 6" | **207702** | $24,530.59 |
| **Model C500 Reduced Pressure Detector Assembly (w/ FxG O.S.&Y. Valves)** | | |
| 8" | **208382** | $53,031.32 |

## Wilkins

| Description | Part Number | List Price |
|---|---|---|
| **Model 350ADA Double Check Detector (w/ O.S.&Y. Valves, FxG)** | | |
| 350ADAG DCDA W/FXG OSY 4" (CFM) | **3501401** | $28,225.09 |
| **Model 375A Reduced Pressure Principle (w/ O.S.&Y. Valves, FxG)** | | |
| 375A RPA W/FXG OSY VLV 6" | **3751600** | $33,059.49 |
| **Air Gap Drains** | | |
| AG-4 – 3/4" - 1" | **73070** | $242.18 |

## Watts Regulator

| Description | Part Number | List Price |
|---|---|---|
| **Model 007 QT Double Check Backflow (w/Ball Valve)** | | |
| 1 1/2" | **20616** | $2,223.99 |
| **Pressure Relief Valve** | | |
| #53L 175 psi | **19806600** | $189.29 |

*'See latest Technical Data Sheets for specific Approvals, Listings, Design Parameters & available finishes. Sprinkler heads & escutcheons are priced separately unless otherwise noted. Items marked "C.O." are made to order and may require longer delivery times.*

## SCI Coop-Let F.T.

| Part No. | Size / Description | List Price |
|---|---|---|
| 251100 | SCI Coop-Let F.T. 1/2" x 1" - 1 1/2 | $24.92 |
| 251120 | SCI Coop-Let F.T. 1/2" x 2" - 2 1/2 | $24.92 |
| 251130 | SCI Coop-Let F.T. 1/2" x 3" - 8 | $24.92 |
| 251140 | SCI Coop-Let F.T. 3/4" x 1" - 1 1/2 | $24.92 |
| 251150 | SCI Coop-Let F.T. 3/4" x 2" - 2 1/2 | $24.92 |
| 251180 | SCI Coop-Let F.T. 1" x 1 1/4" - 1 1/2 | $28.48 |
| 251200 | SCI Coop-Let F.T. 1" x 2 1/2 | $28.48 |
| 251210 | SCI Coop-Let F.T. 1" x 3" - 4 | $28.48 |
| 251230 | SCI Coop-Let F.T. 1 1/4" x 1 1/2 | $39.45 |
| 251240 | SCI Coop-Let F.T. 1 1/4" x 2 | $39.45 |
| 251250 | SCI Coop-Let F.T. 1 1/4" x 2 1/2 | $39.45 |
| 251260 | SCI Coop-Let F.T. 1 1/4" x 3" - 4 | $39.45 |
| 251270 | SCI Coop-Let F.T. 1 1/4" x 5" - 8 | $39.45 |
| 251280 | SCI Coop-Let F.T. 1 1/2" x 2 | $56.60 |
| 251290 | SCI Coop-Let F.T. 1 1/2" x 2 1/2 | $56.60 |
| 251300 | SCI Coop-Let F.T. 1 1/2" x 3 | $56.60 |
| 251310 | SCI Coop-Let F.T. 1 1/2" x 4"- 5 | $56.60 |
| 251320 | SCI Coop-Let F.T. 1 1/2" x 6"- 8 | $56.60 |
| 251330 | SCI Coop-Let F.T. 2" x 2 1/2 | $74.90 |
| 251340 | SCI Coop-Let F.T. 2" x 3 | $74.90 |
| 251350 | SCI Coop-Let F.T. 2" x 4" - 5 | $74.90 |
| 251360 | SCI Coop-Let F.T. 2" x 6" - 8 | $74.90 |
| 251370 | SCI Coop-Let F.T. 2 1/2" x 3 | $126.41 |
| 251380 | SCI Coop-Let F.T. 2 1/2" x 4 | $126.41 |
| 251400 | SCI Coop-Let F.T. 2 1/2" x 8 | $126.41 |

## SCI Coop-Let Grooved

| Part No. | Size / Description | List Price |
|---|---|---|
| 251460 | SCI Coop-Let Grvd 1 1/4" x 1 1/2 | $40.46 |
| 251470 | SCI Coop-Let Grvd 1 1/4" x 2 | $40.46 |
| 251490 | SCI Coop-Let Grvd 1 1/4" x 3 | $40.46 |
| 251500 | SCI Coop-Let Grvd 1 1/4" x 4"- 5 | $40.46 |
| 251510 | SCI Coop-Let Grvd 1 1/4" x 6 | $40.46 |
| 251540 | SCI Coop-Let Grvd 1 1/2" x 2 1/2 | $40.60 |
| 251550 | SCI Coop-Let Grvd 1 1/2" x 3 | $40.60 |
| 251560 | SCI Coop-Let Grvd 1 1/2" x 4"- 5 | $40.60 |
| 251570 | SCI Coop-Let Grvd 1 1/2" x 6 | $40.60 |
| 251590 | SCI Coop-Let Grvd 2" x 2 1/2 | $47.22 |
| 251600 | SCI Coop-Let Grvd 2" x 3 | $47.22 |
| 251610 | SCI Coop-Let Grvd 2" x 4"- 5 | $47.22 |
| 251620 | SCI Coop-Let Grvd 2" x 6 | $47.22 |
| 251630 | SCI Coop-Let Grvd 2" x 8 | $47.22 |
| 251640 | SCI Coop-Let Grvd 2 1/2" x 3 | $55.36 |
| 251650 | SCI Coop-Let Grvd 2 1/2" x 4 | $55.36 |
| 251660 | SCI Coop-Let Grvd 2 1/2" x 6 | $55.36 |
| 251670 | SCI Coop-Let Grvd 2 1/2" x 8 | $55.36 |
| 251720 | SCI Coop-Let Grvd 4" x 8 | $129.60 |

## Merit

| Size/Description | Part No. | List Price |
|---|---|---|
| **Grooved Outlets – Sch. 40** | | |
| Tee-Let 1 1/4" x 1 1/4" | **15250** | $58.71 |
| Tee-Let 1 1/2" x 1 1/2" | **15500** | $63.32 |
| Tee-Let 2" x 2" | **15750** | $68.31 |
| Tee-Let 2 1/2" x 2 1/2" | **16100** | $96.31 |
| Tee-Let 3" x 3" | **16400** | $124.71 |
| Tee-Let 4" x 4" | **16700** | $764.14 |

## Test/Drain Assemblies

| Size/Description | Part No. | List Price |
|---|---|---|
| 1" "Sure Test" | **23508** | $2,269.60 |
| 1 1/4" "Sure Test | **23509** | $789.65 |
| SIGN "B" Test & Drain 6 x 2" | **23504** | $15.03 |

## Tee-Let Welded Outlet Fittings - Grooved

| Size/Description | Part No. | List Price |
|---|---|---|
| 1 1/4" x 2" - 2 1/2" | **15350** | $58.71 |
| 1 1/4" x 3" - 4" | **15400** | $58.71 |
| 1 1/2" x 2 1/2" | **15600** | $59.10 |
| 1 1/2" x 3" - 4" | **15650** | $63.69 |
| 2" x 2 1/2" | **15800** | $81.35 |
| 2" x 3" | **15850** | $68.31 |
| 2" x 3 1/2" - 4" | **15900** | $68.31 |
| 2" x 8" | **16050** | $50.27 |
| 2 1/2" x 3" | **16150** | $96.70 |
| 2 1/2" x 3 1/2" - 4" | **16200** | $96.31 |
| 2 1/2" x 6" | **16300** | $96.31 |
| 2 1/2" x 8" | **16350** | $70.22 |
| 3" x 4" | **16500** | $124.71 |
| 3" x 6" | **16600** | $123.94 |

## Sight Drains

| Size/Description | Part No. | List Price |
|---|---|---|
| 1" Sight Drain | **23484** | $223.42 |
| 1 1/4" Sight Drain | **23485** | $252.04 |
| 2" Sight Drain | **23486** | $408.98 |
| 1" Sight Drain w/ 1 1/2" orifice | **23487** | $355.94 |

## #71 Flange Adapter - Bolt, Nut, Gasket Kits

| Size | Part No. | List Price |
|---|---|---|
| 2 1/2" | **50241P** | See Section 18 for current list prices |
| 3" | **50242P** | |
| 4" | **50243P** | |
| 5" | **50248P** | |
| 6" | **50244P** | |
| 8" | **50245P** | |
| 10" | **50246P** | |
| 12" | **50247P** | |

## Split One

| box qty. | Size | Part No. | List Price |
|---|---|---|---|
| **Split Rings Plastic Floor and Ceiling Plates Chrome (Plastic)** | | | |
| 12 | 1 1/2" | **23462** | $5.39 |
| 12 | 1" | **23464** | $5.39 |
| 12 | 1 1/4" | **23465** | $5.39 |
| 12 | 1 1/2" | **23466** | $6.61 |
| 12 | 2" | **23467** | $7.90 |
| 12 | 2 1/2" | **23468** | $7.21 |
| 12 | 3" | **23469** | $12.01 |
| 12 | 4" | **23470** | $16.39 |
| 6 | 6" | **23472** | $24.47 |
| 6 | 8" | **23473** | $45.01 |
| **Split Rings Plastic Floor and Ceiling Plates White (Plastic)** | | | |
| 12 | 1" | **23452** | $8.41 |
| 12 | 1 1/4" | **23453** | $2.90 |
| 12 | 1 1/2" | **23454** | $2.90 |
| 12 | 2" | **23455** | $4.26 |
| 12 | 2 1/2" | **23456** | $4.26 |
| 12 | 3" | **23457** | $4.95 |
| 12 | 4" | **23458** | $6.37 |
| 6 | 6" | **23460** | $9.74 |
| 6 | 8" | **23461** | $23.00 |

*'See latest Technical Data Sheets for specific Approvals, Listings, Design Parameters & available finishes. Sprinkler heads & escutcheons are priced separately unless otherwise noted. Items marked "C.O." are made to order and may require longer delivery times.*

## Misc.

| Size/Description | Part No. | List Price |
|---|---|---|
| 1/2" x 3/4" Brass Extension Nipples | **23311** | $33.32 |
| Air-Water Gauge Kit | **23559** | $216.93 |
| Breakable Lock (keyed alike) #500KABRK | **2354** | $75.91 |
| 6" Wood Handle Pipe Dope Brush | **23506** | $22.91 |

## Drop In - Anchor and Setting Tools

| Size/Description | Part No. | List Price |
|---|---|---|
| 3/8" Drop-In Anchor FDC | **23561** | $2.32 |
| 3/8" Drop-In Tool | **23563** | $19.59 |

## Wall Plates - Cast Iron Galvanized

| Size/Description | Part No. | List Price |
|---|---|---|
| Wall Plate 1 1/2" | **23476** | $38.78 |

## Flanged Fittings

| Cast Iron Companion Flange | | |
|---|---|---|
| 2" x 6" | **86710** | $267.21 |
| 2 1/2" x 7" | **86711** | $256.92 |
| 3" x 7 1/2" | **86712** | $330.01 |
| 4" x 9" | **86713** | $484.15 |
| 6" x 11" | **86714** | $695.40 |
| 8" x 13 1/2" | **86715** | $1,096.18 |

## Ductile Iron Fittings

| Size | Part No. | List Price | Box Qty. |
|---|---|---|---|
| **#811 Ductile Iron 90° Elbows** | | | |
| 1/2" | **86206** | $17.03 | 240 |
| 3/4" | **86205** | $17.51 | 120 |
| 1" | **86200** | $13.85 | 70 |
| 1 1/4" | **86201** | $31.12 | 40 |
| 1 1/2" | **86202** | $47.06 | 30 |
| 2" | **86203** | $76.27 | 20 |
| 2 1/2" | **86204** | $142.83 | 10 |
| **#812 Ductile Iron Reducing 90° Elbows** | | | |
| 3/4" x 1/2" | **86342** | $16.74 | 160 |
| 1" x 1/2" | **86210** | $24.17 | 110 |
| 1" x 3/4" | **86211** | $24.17 | 90 |
| 1 1/4" x 1/2" | **86212** | $50.55 | 75 |
| 1 1/4" x 3/4" | **86213** | $43.11 | 60 |
| 1 1/4" x 1" | **86214** | $39.05 | 55 |
| 1 1/2" x 3/4" | **86221** | $58.91 | 45 |
| 1 1/2" x 1" | **86215** | $55.01 | 40 |
| 1 1/2" x 1 1/4" | **86216** | $55.01 | 35 |
| 2" x 3/4" | **86217** | $106.15 | 30 |
| 2" x 1" | **86218** | $87.10 | 25 |
| 2" x 1 1/2" | **86220** | $87.10 | 20 |
| 2 1/2" x 2" | **86762** | $222.11 | 15 |
| **#813 Ductile Iron 45° Elbows** | | | |
| 1/2" | **86780** | $95.15 | 250 |
| 3/4" | **86781** | $91.36 | 150 |
| 1" | **86280** | $29.51 | 90 |
| 1 1/4" | **86281** | $41.21 | 50 |
| 1 1/2" | **86282** | $70.33 | 35 |
| 2" | **86283** | $86.05 | 18 |
| 2 1/2" | **86782** | $185.40 | 12 |
| **#814 Ductile Iron Tees** | | | |
| 1/2" | **86340** | $25.67 | 150 |
| 3/4" | **86341** | $30.24 | 90 |
| 1" | **86230** | $25.45 | 60 |
| 1 1/4" | **86231** | $53.46 | 35 |
| 1 1/2" | **86232** | $68.30 | 24 |
| 2" | **86233** | $90.03 | 12 |
| 2 1/2" | **86234** | $216.46 | 8 |



*Items shown on this sheet may not be stocked at all Tyco Fire Products warehouses. Please ask your local Tyco Fire Products location for availability. Freight terms may vary for non commonly stocked items. See latest Technical Data Sheets for specific Approvals, Listings, Design Parameters & available finishes. Prices subject to change without notice.*

## Ductile Iron Fittings

### #815 Ductile Iron Reducing Tees

| Size | Part No. | List Price | Box Qty. |
|---|---|---|---|
| 3/4" x 3/4" x 1/2" | **86235** | $42.88 | 95 |
| 3/4" x 3/4" 1" | **86755** | $50.83 | 65 |
| 1" x 1/2" x 1" | **86236** | $35.95 | 55 |
| 1" x 3/4" x 1/2" | **86756** | $57.09 | 80 |
| 1" x 3/4" x 3/4" | **86757** | $50.83 | 65 |
| 1" x 3/4" x 1" | **86237** | $53.32 | 55 |
| 1" x 1" x 1/2" | **86238** | $31.91 | 65 |
| 1" x 1" x 3/4" | **86239** | $42.08 | 60 |
| 1" x 1" x 1 1/4" | **86240** | $54.43 | 45 |
| 1" x 1" x 1 1/2" | **86241** | $89.21 | 35 |
| 1 1/4" x 1" x 1/2" | **86242** | $41.93 | 50 |
| 1 1/4" x 1" x 3/4" | **86243** | $60.48 | 50 |
| 1 1/4" x 1" x 1" | **86244** | $52.86 | 45 |
| 1 1/4" x 1" x 1 1/4" | **86245** | $41.93 | 40 |
| 1 1/4" x 1" x 1 1/2" | **86246** | $68.45 | 30 |
| 1 1/4" x 1 1/4" x 1/2" | **86247** | $53.52 | 45 |
| 1 1/4" x 1 1/4" x 3/4" | **86248** | $52.92 | 45 |
| 1 1/4" x 1 1/4" x 1" | **86249** | $51.19 | 40 |
| 1 1/4" x 1 1/4" x 1 1/2" | **86250** | $90.78 | 30 |
| 1 1/4" x 1 1/4" x 2" | **86251** | $179.50 | 24 |
| 1 1/2" x 1" x 1/2" | **86252** | $107.91 | 40 |
| 1 1/2" x 1" x 3/4" | **86253** | $98.83 | 40 |
| 1 1/2" x 1" x 1" | **86254** | $88.14 | 30 |
| 1 1/2" x 1" x 1 1/2" | **86256** | $69.13 | 30 |
| 1 1/2" x 1 1/4" x 1/2" | **86257** | $39.61 | 40 |
| 1 1/2" x 1 1/4" x 3/4" | **86258** | $73.45 | 40 |
| 1 1/2" x 1 1/4" x 1" | **86259** | $68.57 | 30 |
| 1 1/2" x 1 1/4" x 2" | **86260** | $153.46 | 20 |
| 1 1/2" x 1 1/2" x 1/2" | **86261** | $65.99 | 35 |
| 1 1/2" x 1 1/2" x 3/4" | **86262** | $70.63 | 35 |
| 1 1/2" x 1 1/2" x 1" | **86263** | $67.27 | 30 |
| 1 1/2" x 1 1/2" x 1 1/4" | **86264** | $88.35 | 30 |
| 1 1/2" x 1 1/2" x 2" | **86265** | $189.58 | 20 |
| 2" x 1" x 2" | **86266** | $90.21 | 15 |
| 2" x 1 1/4" x 2" | **86267** | $177.03 | 15 |
| 2" x 1 1/2" x 1/2" | **86268** | $105.80 | 30 |
| 2" x 1 1/2" x 3/4" | **86269** | $112.76 | 25 |
| 2" x 1 1/2" x 1" | **86270** | $92.56 | 20 |
| 2" x 1 1/2" x 1 1/2" | **86272** | $131.95 | 20 |
| 2" x 1 1/2" x 2" | **86273** | $145.49 | 15 |
| 2" x 2" x 1/2" | **86222** | $90.80 | 20 |
| 2" x 2" x 3/4" | **86223** | $90.80 | 20 |
| 2" x 2" x 1" | **86224** | $87.67 | 20 |
| 2" x 2" x 1 1/4" | **86225** | $99.37 | 20 |
| 2" x 2" x 1 1/2" | **86226** | $164.28 | 15 |
| 2" x 2" x 2 1/2" | **86227** | $241.06 | 10 |
| 2 1/2" x 2" x 3/4" | **86274** | $259.09 | 15 |

## Ductile Iron Fittings

### #818 Ductile Iron Couplings

| Size | Part No. | List Price | Box Qty. |
|---|---|---|---|
| 1/2" | **72779** | $11.29 | 360 |
| 3/4" | **72778** | $14.14 | 200 |
| 1" | **72755** | $18.24 | 110 |
| 1 1/4" | **72754** | $26.89 | 75 |
| 1 1/2" | **72753** | $38.30 | 60 |
| 2" | **72752** | $56.27 | 30 |
| 2 1/2" | **72758** | $108.46 | 18 |

### #816 Ductile Iron Reducing Couplings

| | | | |
|---|---|---|---|
| 3/4" x 1/2" | **86772** | $14.66 | 150 |
| 1" x 1/2" | **86228** | $15.89 | 140 |
| 1" x 3/4" | **86229** | $21.99 | 120 |
| 1 1/4" x 3/4" | **86209** | $46.82 | – |

### #820 Ductile Iron Caps

| | | | |
|---|---|---|---|
| 1/2" | **72776** | $12.47 | 500 |
| 3/4" | **72777** | $14.94 | 300 |
| 1" | **72824** | $22.17 | 180 |
| 1 1/4" | **72756** | $30.98 | 110 |
| 1 1/2" | **72822** | $43.49 | 80 |
| 2" | **72823** | $57.69 | 45 |
| 2 1/2" | **72825** | $162.68 | 25 |

### #817 Ductile Iron Crosses

| | | | |
|---|---|---|---|
| 1" | **86284** | $87.09 | 45 |
| 1 1/4" | **86285** | $114.86 | 25 |
| 1 1/2" | **86286** | $147.45 | 20 |
| 2" | **86287** | $207.82 | 10 |

### #817 Ductile Iron Reducing Crosses

| | | | |
|---|---|---|---|
| 1 1/4" x 1 1/4" x 1" x 1" | **86289** | $114.75 | 30 |
| 1 1/2" x 1 1/2" x 1" x 1" | **86322** | $147.31 | 24 |
| 2" x 2" x 1" x 1" | **86291** | $487.86 | 10 |

### #719 Ductile Iron Plugs

| | | | |
|---|---|---|---|
| 1/2" | **86292** | $6.63 | 500 |
| 3/4" | **86293** | $9.26 | 300 |
| 1" | **86294** | $11.52 | 200 |
| 1 1/4" | **86295** | $17.62 | 110 |
| 1 1/2" | **86296** | $21.88 | 80 |
| 2" | **86297** | $27.48 | 45 |

### #825 Ductile Iron Extension Pieces

| | | | |
|---|---|---|---|
| 1/2" x 1 1/2" | **72751** | $27.48 | 300 |
| 1/2" x 2" | **72980** | $27.48 | 250 |
| 3/4" x 1 1/2" | **72981** | $61.95 | 250 |
| 3/4" x 2" | **72982** | $61.95 | 200 |

*'See latest Technical Data Sheets for specific Approvals, Listings, Design Parameters & available finishes. Sprinkler heads & escutcheons are priced separately unless otherwise noted. Items marked "C.O." are made to order and may require longer delivery times.*

## Ductile Iron Fittings

| #827 Ductile Iron Hex Bushings | | | |
|---|---|---|---|
| 1" x 1/2" | **72726** | $20.51 | 280 |
| 1" x 3/4" | **72762** | $19.46 | 280 |
| 1 1/4" x 1" | **72763** | $23.10 | 150 |
| 1 1/2" x 1" | **72757** | $26.82 | 100 |
| 1 1/2" x 1 1/4" | **72764** | $25.79 | 100 |
| 2" x 1" | **72759** | $34.38 | 80 |
| 2" x 1 1/4" | **72761** | $34.38 | 80 |
| 2" x 1 1/2" | **72775** | $34.38 | 80 |
| **#830 Ductile Iron Unions** | | | |
| 1/2" | **86207** | $79.91 | 110 |
| 3/4" | **86275** | $94.12 | 80 |
| 1" | **86276** | $137.63 | 50 |
| 1 1/4" | **86277** | $168.31 | 35 |
| 1 1/2" | **86278** | $216.89 | 25 |
| 2" | **86279** | $307.88 | 18 |
| **Central Sprinkler California Fittings** | | | |
| *Size* | *Part No.* | *List Price* | *Box Qty.* |
| **Male 90° Street Elbow** | | | |
| 1" x 1/2" | **42003** | $79.34 | 60 |

## Standard Black Nipple

| *Size* | *Part No.* | *List Price* |
|---|---|---|
| 1/4" x 3" | **60270** | $40.98 |
| 3/4" x Close | **60181** | $19.60 |
| 3/4" x 3" | **60152** | $25.00 |
| 3/4" x 3 1/2" | **60182** | $29.13 |
| 3/4" x 4" | **60183** | $36.95 |
| 3/4" x 4 1/2" | **60184** | $34.16 |
| 3/4" x 5" | **60185** | $34.16 |
| 3/4" x 5 1/2" | **60186** | $39.78 |
| 1" x Close | **60104** | $21.48 |
| 1" x 2" | **60105** | $31.00 |
| 1" x 2 1/2" | **60106** | $32.24 |
| 1" x 3" | **60107** | $32.24 |
| 1" x 4" | **60109** | $23.82 |
| 1" x 6" | **60113** | $33.74 |
| 1" x 11" | **60204** | $74.51 |
| 1 1/4" x 2" | **60115** | $39.41 |
| 1 1/4" x 2 1/2" | **60116** | $32.56 |
| 1 1/2" x 2 1/2" | **60126** | $55.79 |
| 2" x 3" | **60136** | $49.91 |

## Galvanized Nipple

| *Size* | *Part No.* | *List Price* |
|---|---|---|
| 1" x 2" | **50143** | $22.61 |

*'See latest Technical Data Sheets for specific Approvals, Listings, Design Parameters & available finishes. Sprinkler heads & escutcheons are priced separately unless otherwise noted. Items marked "C.O." are made to order and may require longer delivery times.*

# Price Book - Section J
# Lubricants

## LA-CO Industries

| Thread Sealant Paste | | |
|---|---|---|
| ***Description*** | ***Part No.*** | ***List Price*** |
| Slic-Tite - Quart | **32004** | $787.16 |
| Slic-Tite - Quart BIC* | **32025** | $1,265.43 |
| * BIC - Brush In Can | | |
| **Gasket Lubricant** | | |
| Lubri-Joint Qt | **32005** | See Section 18 for list prices |
| **Pipe Markers (Valve Action)** | | |
| White | **32017** | $130.51 |
| Yellow | **32018** | $130.51 |

## Teflon Pipe Tape

| ***Description*** | ***Part No.*** | ***List Price*** |
|---|---|---|
| 1/2" x 520' | **23523** | $3.35 |
| 3/4" x 520' | **23524** | $5.26 |

## Sealant

| PE Permabond | | |
|---|---|---|
| ***Description*** | ***Part No.*** | ***List Price*** |
| LH-056 350ML | **33045** | $240.89 |
| **PipeFit Anaerobic Sealant** | | |
| 250ml | **23520** | $123.14 |
| **Adhesive** | | |
| IB2500 - 9.5G Bottle for DSB-2 | **415090100** | $19.01 |
| **Thread Sealant** | | |
| 1-quart Can | **23517** | $140.43 |
| **Gasket Lubricant** | | |
| 2-Lb | **23521** | $40.19 |



* Dow Corning is a trademark of Dow Corning Corporation.

*Items shown on this sheet may not be stocked at all Tyco Fire Products warehouses. Please ask your local Tyco Fire Products location for availability. Freight terms may vary for non commonly stocked items. See latest Technical Data Sheets for specific Approvals, Listings, Design Parameters & available finishes. Prices subject to change without notice.*

*'See latest Technical Data Sheets for specific Approvals, Listings, Design Parameters & available finishes. Sprinkler heads & escutcheons are priced separately unless otherwise noted. Items marked "C.O." are made to order and may require longer delivery times.*

## MIFAB / PMR

### Access Doors - Drywall

| Description | Part No. | List Price |
|---|---|---|
| DW, 12" x 12" | **2784** | $499.59 |
| DW, 16" x 16" | **2781** | $433.19 |
| VA, 12" x 24" | **21070** | $454.29 |
| VA, 14" x 14" | **21071** | $302.86 |
| VA, 16" x 16" | **21072** | POA |
| UA, 8" x 8" | **21078** | $192.19 |
| UA, 10" x 10" | **21080** | $236.80 |
| UA, 12" x 12" | **21075** | $205.54 |
| UA, 16" x 20" | **21083** | $584.28 |
| UA, 16" x 24" | **21084** | $503.12 |
| UA, 18" x 18" | **21085** | $434.61 |
| UA, 18" x 36" | **21087** | $1,051.21 |
| UA, 24" x 24" | **21076** | $600.79 |
| UA, 24" x 36" | **21094** | $893.11 |
| UA, 32" x 32" | **21096** | $1,363.20 |
| UA, 36" x 36" | **21097** | $1,384.99 |
| **Metal: Model CAD-FL-PK** | | |
| 8" x 8" | **21073** | $397.72 |
| 12" x 18" | **22082** | $1,702.69 |
| 12" x 24" | **21074** | $599.39 |
| 14" x 14" | **22071** | $1,277.71 |
| 16" x 16" | **22072** | $1,847.11 |
| 16" x 20" | **22083** | $1,642.50 |
| 24" x 24" | **22076** | $3,125.75 |
| 36" x 36" | **22097** | $6,416.29 |
| **Metal: Model CAD-FL** | | |
| 12" x 24" | **22098** | $1,579.54 |

## Acudor Products

### Access Door, Flush, Prime coated steel, UF5000

| Description | Part No. | List Price |
|---|---|---|
| 6" x 6" | **22100** | $1,177.18 |
| 8" x 8" | **22101** | $1,196.44 |
| 12" x 12" | **22102** | $1,398.64 |
| 12" x 18" | **22103** | $2,140.08 |
| 12" x 24" | **22109** | $2,426.52 |
| 16" x 16" | **22104** | $2,137.69 |
| 18" x 18" | **22105** | $2,342.29 |
| 18" x 24" | **22106** | $3,141.51 |
| 24" x 36" | **22108** | $5,580.06 |

*'See latest Technical Data Sheets for specific Approvals, Listings, Design Parameters & available finishes. Sprinkler heads & escutcheons are priced separately unless otherwise noted. Items marked "C.O." are made to order and may require longer delivery times.*

## WORLDWIDE HEADQUARTERS
Tyco Fire Protection Products
1467 Elmwood Avenue
Cranston, RI 02910
(Toll Free) 800-862-6785
www.Tyco-Fire.com

## UNITED STATES
Regional Headquarters
1467 Elmwood Avenue
Cranston, RI 02910
(Toll Free) 800-862-6785

**Carol Stream, IL:**
Tel: (800) 323-9485, Fax: 630-871-7464

**Coppell, TX:**
Tel: (800) 442-3541, (972) 745-0043,
Fax: 972-745-8594

**Phoenix, AZ:**
Tel: (800) 558-5236, Fax: 800-877-1295

## CANADA
Regional Headquarters
Oakville
Tel: 877-992-6785
Fax 866-527-8785

## EUROPE & MIDDLE EAST
Regional Headquarters
Kopersteden 1, NL-7547 TJ Enschede
P.O. Box 198, 7500 AD
Enschede, The Netherlands
Tel: 31-53-428-4444, Fax: 31-53-428-3377

**Manchester, UK:**
Tel: 44-161-259-4000, Fax 44-161-259-0491

**Paris Nord II, France:**
Tel: 33-1-48-178-727 , Fax 33-1-48-178-720

**Rodgau Germany:**
Tel: 49-6106-84455, Fax 49-6106-18177

**Coslada Madrid, Spain:**
Tel: 34-1-669-3906, Fax 34-1-669-2018

**Lørenskog, Norway:**
Tel: 47-67-91-77-00, Fax 47-67-91-77-15

**Lammhult, Sweden:**
Tel: 46-472-269-980, Fax 46-472-269-989

**Dublin, Ireland:**
Tel: 44-161-259-4000, Fax 44-161-259-0491

**Bolzano,Italy:**
Tel: 39-0471-252-091, Fax 39-0471-254-058

**Milano, Italy:**
Tel: 39-0293-548-736, Fax 39-0293-548-690

**Dubai, United Arab Emirates:**
Tel: +971 4455 0700, Fax +971 4455 0799

**Budapest, Hungary:**
Tel: 36-148-11-383, Fax 36-120-34-427

**Wels/Thalheim, Austria:**
Tel: 43-072-42-65-054, Fax 43-072-42-74-393

## LATIN AMERICA
South America, Central America & Caribbean
Customer Service Support
Solange Forin
Tel: 561-912-6260
Email: Solange.Forin@jci.com

Regional Headquarters - Mexico
Av. Presidente Juarez 2007 Lote 6
San Jeronimo Tepetalcalco
Tlalnepantla, Estado de Mexico
54090 Mexico
Tel: 525-55-3212350

## ASIA
Regional Headquarters
Tyco Fire & Building Products Asia Pte Ltd
2 Serangoon North Ave. 5
#07-01
Singapore 554911
Tel: (65) 6577-4360
Fax: (65) 6481-8791
Email: info.apac@tycofp.com


**www.tyco-fire.com**

***Distributed by:***

© Copyright 2024 Johnson Controls International, plc. All rights reserved.
Updated 11/21/2024