MOEN®

Illustrated Parts

GIBSON™

Single-Handle M-CORE™ Trim

ORDER BY PART NUMBER

SHOWER TRIM ONLY	TUB SHOWER TRIM	FINISH
UT3002EP	UT3003EP	Chrome
UT3002EPBN	UT3003EPBN	Brushed Nickel
UT3002EPBL	UT3003EPBL	Matte Black

**All models with an EP suffix include a 1.75 GPM showerhead*

ID	Kit Description	Kit Number	Finish
A	Shower Arm Flange	137488	Chrome
		137488BN	Brushed Nickel
		137488BL	Matte Black
B	Shower Arm (Showerhead EP)	10154	Chrome
		10154BN	Brushed Nickel
		10154BL	Matte Black
C	Shower Head (1.75 GPM)	6399EP	Chrome
		6399EPBN	Brushed Nickel
		6399EPBL	Matte Black
D	Cartridge Assembly	1212	N/A
E	Cartridge Nut	200762	N/A
F	Sleeve	200775	Chrome
		200775BN	Brushed Nickel
		200775BL	Matte Black
G	Backing Plate	200766	N/A
H	Snap Ring	200772	N/A
I	Backing Plate Screws (2)	200764	N/A
J	Escutcheon Kit	206310	Chrome
		206310BN	Brushed Nickel
		206310BL	Matte Black
K	Set Screw *(Requires 3/32" Hex Key)*	40057	N/A
L	Handle Kit	206321	Chrome
		206321BN	Brushed Nickel
		206321BL	Matte Black
M	Diverter Tub Spout	3890	Chrome
		3890BN	Brushed Nickel
		3890BL	Matte Black

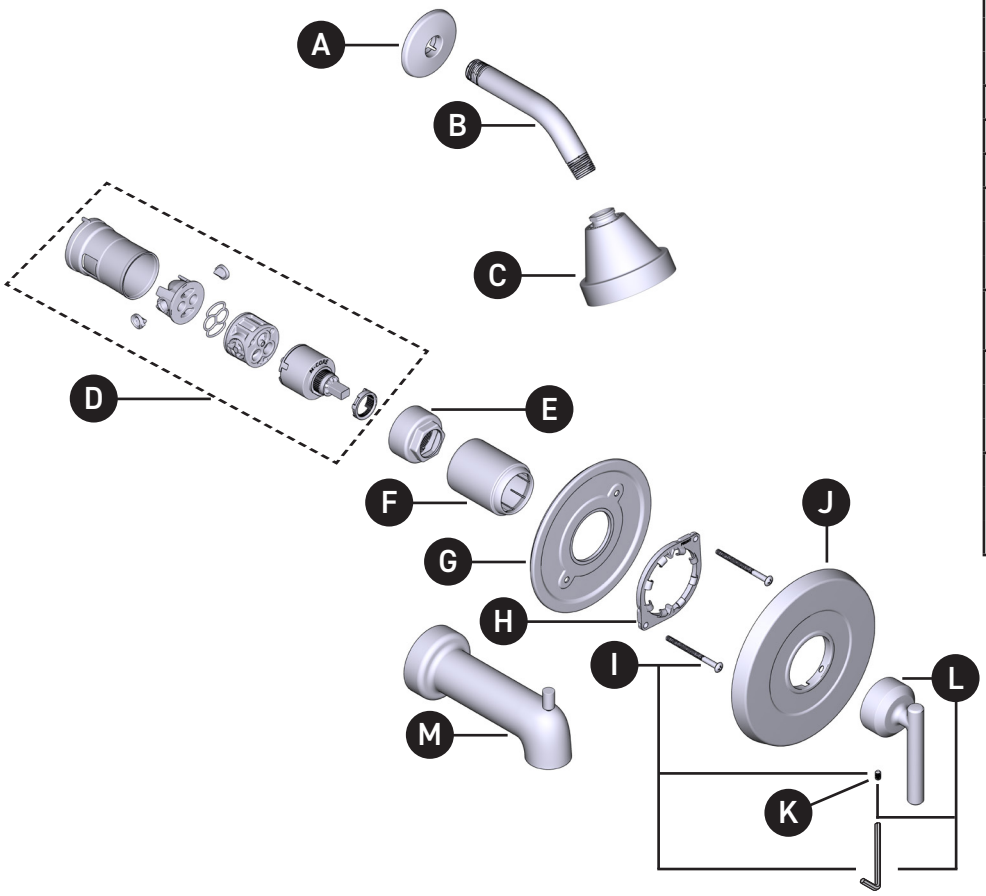

OPTIONAL: 1" Handle Extension Kit

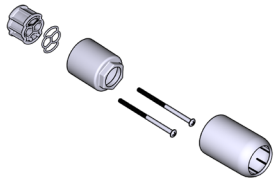

MODEL	FINISH
200755	Chrome
200755BN	Brushed Nickel
200755BG	Matte Black

M•PACT™ System