KVPB36M80,1,6,7ST

36" X 22" Carrara Marble Vanity Top With Stainless Steel Legs

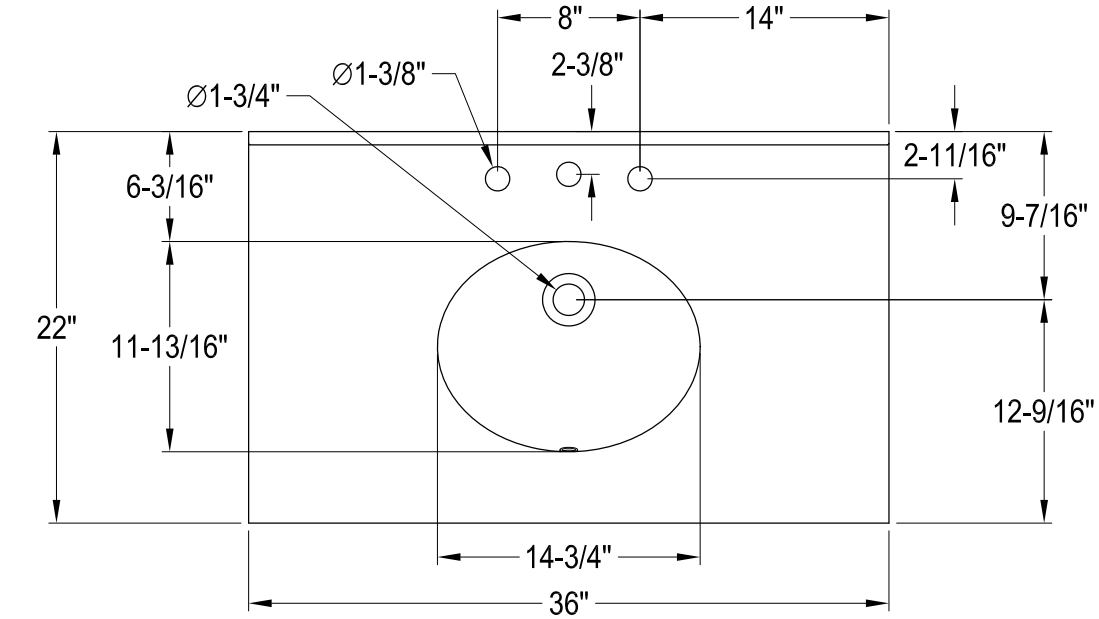

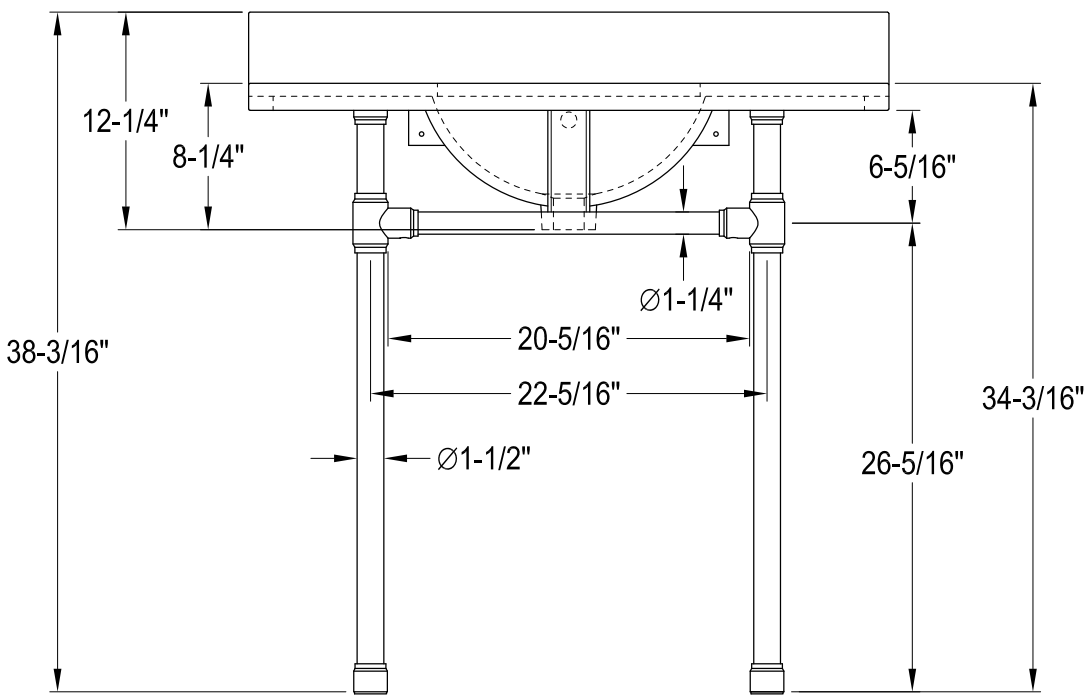

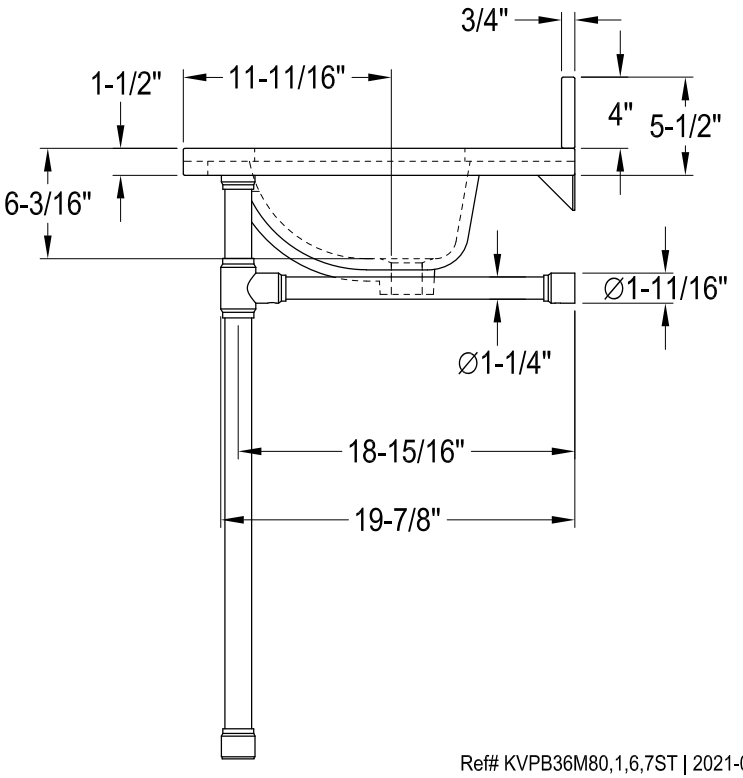

Ref# KVPB36M80,1,6,7ST | 2021-02-B