MAXWELL® SE
1.1/1.6 gpf (4.1/6.0 Lpf)
ErgoHeight™ Elongated Toilet

Features:

GDF20118

Included Components:

☐ Combination	GDF20118
☐ Bowl	GSE21128
☐ Tank	GDF28190

- Vitreous China
- 12″ Rough-in
- 2″ flush valve
- Extra-Large Dual fed siphon jets for high power bowl clearing
- 100% glazed, large trapway for clog-free waste removal
- Double nut, multi-point tank-to-bowl mounting system for tool-free installation
- Chrome top button actuator
- Toilet seat is not included

Technical Information:

Configuration	Two Piece, Elongated ErgoHeight™
Water per Flush	1.1/1.6 gpf (4.1/6.0 Lpf)
Rough-In	12″
Height	30 1/2″
Width	15 3/8″
Depth	28 3/4″
Trapway	1 3/4″
Large Water Surface	8 11/16″ x 6 5/16″
Shipping weight Bowl	42.4 lbs
Shipping weight Tank	25.4 lbs

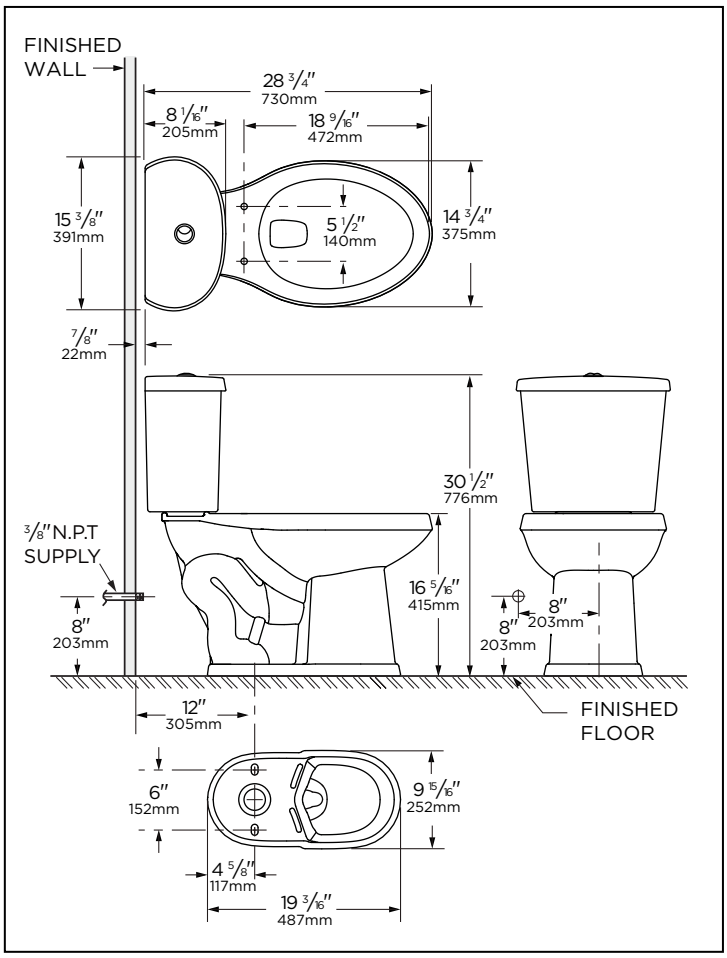

Accessories: (To be purchased separately)

N/A

Other Tank Options: (To be purchased separately)

- Insulated Tank GDF28192

Available Colors:

- White
- Other: Refer to Price Book for additional colors/finishes

Warranty:

- Limited Lifetime on Vitreous China, refer to the website for more details.

HIGH EFFICIENCY TOILET HET

NOTES: All dimensions are in inches and milimeters. Illustrations may not be drawn to scale.

IMPORTANT:

Dimensions of fixtures are nominal and may vary within the range of tolerances established by ASME standard A 112.19.2 THIS FIXTURE QUALIFIES ACCORDING TO ASME TEST PROCEDURES AS EITHER A LOW CONSUMPTION WATER CLOSET WITH AN AVERAGE CONSUMPTION OF 1.6 gpf (6.0 Lpf) OR LESS, OR AS A HIGH EFFICIENCY WATER CLOSET WITH AN AVERAGE CONSUMPTION OF 1.1 gpf (4.1 Lpf) OR LESS. WATER CLOSET CONSUMPTION IS DETERMINED BY THE TANK.

Because we are committed to continual product improvement, specifications are subject to change without notice. 06/21

© 2020 Gerber Plumbing Fixtures LLC. All rights reserved gerber-us.com gerber-ca.com