GERBER®

www.gerberonline.com

MAXWELL®
1.6 gpf (6.0 Lpf)
Elongated Toilet

Features:

GMX20912

Included Components:

- ☐ Combination GMX20912
  - ☐ Bowl GMX21962
  - ☐ Tank GMX28990

- Vitreous China
- 12″ Rough-in
- 3″ flush valve for maximum water force
- Fluidmaster® Fill Valve
- Corrosion resistant flapper
- Extra-Large Dual fed siphon jets for high power bowl clearing
- 100% glazed, 2″ large trapway for clog-free waste removal
- Double nut, multi-point tank-to-bowl mounting system for tool-free installation
- Color matched tank lever
- Toilet seat is not included

Technical Information:

Configuration	Two-piece, Elongated Toilet
Water per Flush	1.6 gpf (6.0 Lpf)
Rough-In	12″
Height	28 5/8″
Width	17 5/16″
Depth	28 7/8″
Trapway	2″
Large Water Surface	8 11/16″ x 6 5/16″
Shipping weight Bowl	48.1 lbs
Shipping weight Tank	30.4 lbs

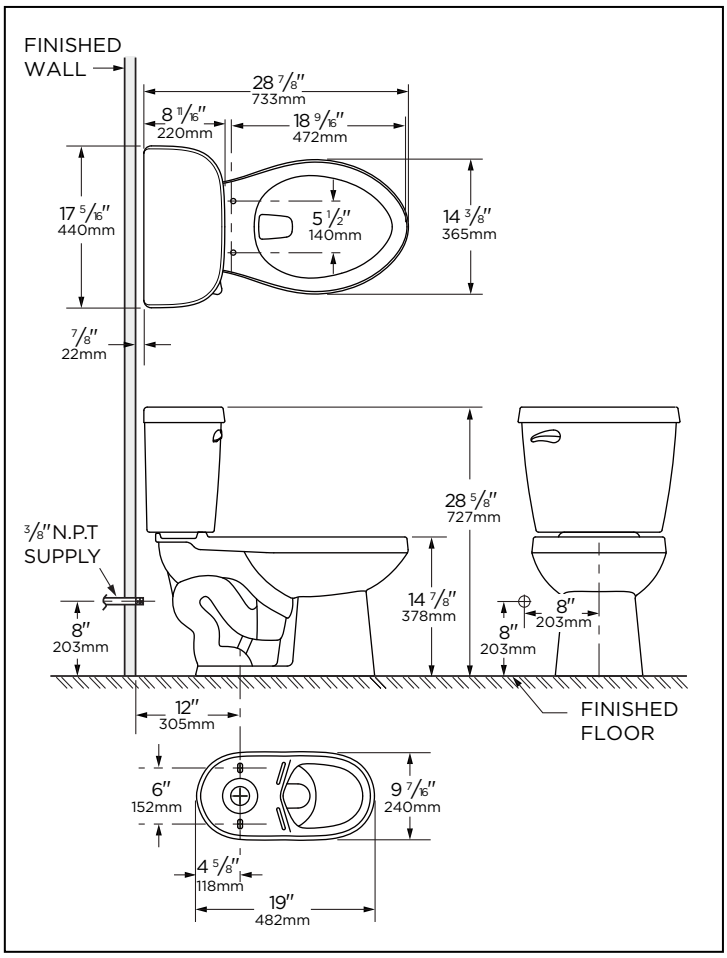

Accessories: (To be purchased separately)

N/A

Other Tank Options: (To be purchased separately)

- Insulated Tank GMX28992
- Tank with Right Hand Lever GMX2899097

Available Colors:

- White
- Other: Refer to Price Book for additional colors/finishes

Warranty:

- Limited Lifetime on Vitreous China, refer to the website for more details.

NOTES: All dimensions are in inches and milimeters. Illustrations may not be drawn to scale.

IMPORTANT:
Dimensions of fixtures are nominal and may vary within the range of tolerances established by ASME standard A 112.19.2
THIS FIXTURE QUALIFIES ACCORDING TO ASME TEST PROCEDURES AS A LOW CONSUMPTION WATER CLOSET WITH AN AVERAGE CONSUMPTION OF 1.6 gpf (6.0 Lpf) OR LESS.