PFISTER

Zanna™

Pull-Down Electronic Kitchen Faucet

F529-EZN3GS Finish*(GS)* ❑

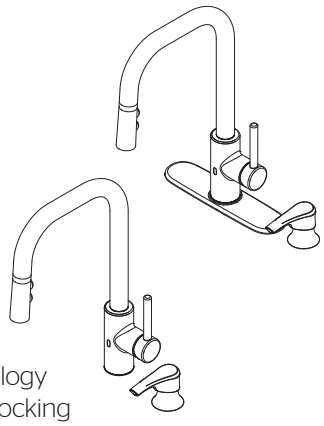

- React™ Touchless Technology
- MagnePfit™ Sprayhead Docking

Specifications

Features

- 1.8 GPM Flow Rate
- React™ Touchless Technology
- 1,2,3 or 4-Hole Installation; Deck Plate or Single Hole Mounting Option
- 3 Function Pull-Down Sprayer (Spray, Stream, and Pause)
- 360˚ Rotating High Arc Swivel Spout
- MagnePfit™ Sprayhead Docking
- Temperature Adjust
- Spot Defense™ Finish Resists Spots and Fingerprints (GS Finish Only)
- Fixed Body
- Wipe Clean™ Nozzles
- Includes Quick Install Tool
- 18" Pull-Down Hose Length
- Polyethylene Hose
- Forward Handle Operation
- SoloTilt™ One-Hand Soap Dispenser Included
- Includes Battery Pack (4 AA Batteries Included)
- Optional AC Adapter, Order 952-008
- SmartStop™
- Low Battery Indicator
- Manual Override
- Pfast Connect™
- Pforever Seal™ Ceramic Disc Valve
- Pforever Warranty®

Code Compliance

Pfister products are designed and manufactured in compliance with the following standards and codes:

- IAPMO Certified to ASME A112.18.1/CSA B125.1 including:
  - ASME A112.18.3 (Backflow Prevention)
- NSF 61/9 AnnexG Certified
- CEC Certified/CALGreen compliant
- ADA Compliant – ANSI A117.1 (Lever Handles Only)

Dimensions

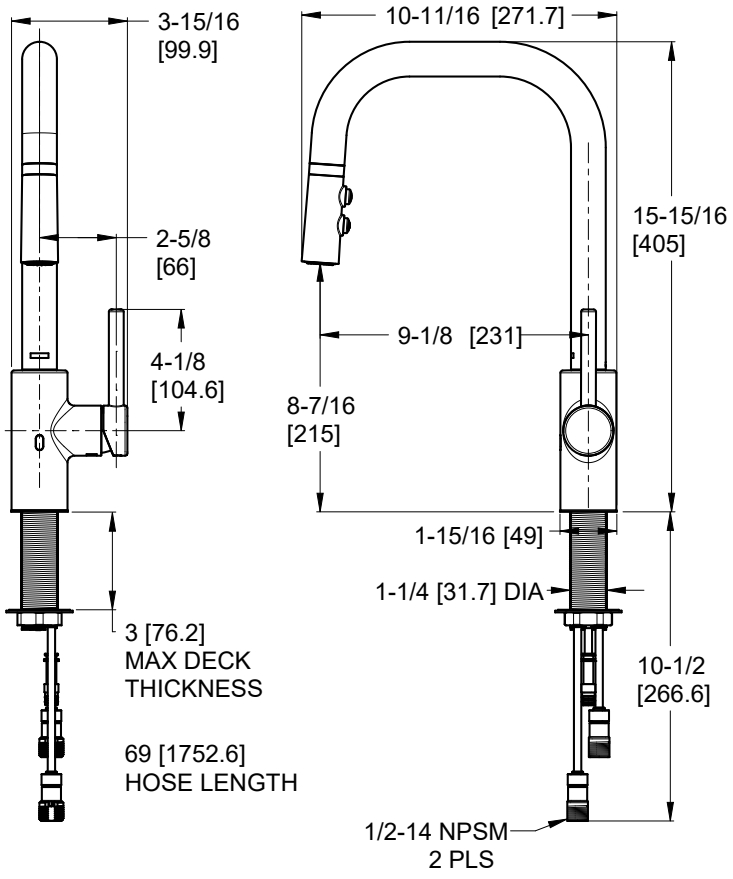

Ø1-3/8 Min to Ø1-1/2 Max. Deck Hole Openings

Control and Battery Boxes

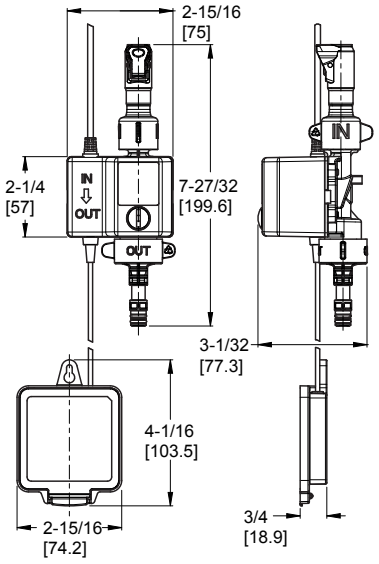

Top Filling Soap Dispenser

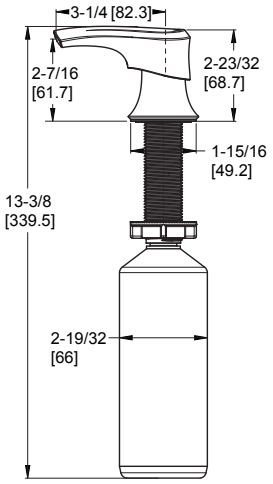

Optional Included Deckplate

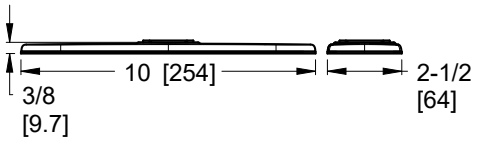

Copyright © 2021, Pfister Inc.