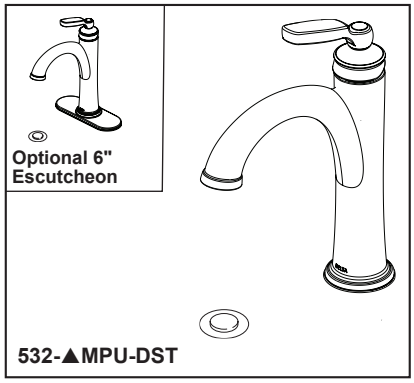

Submitted Model No.: _____

Specific Features: _____

see what Delta can do℠

BATHROOM FAUCET

- Woodhurst™ Bath Collection
- Single Handle Deck Mount

FEATURES:

- DIAMOND Seal® Technology

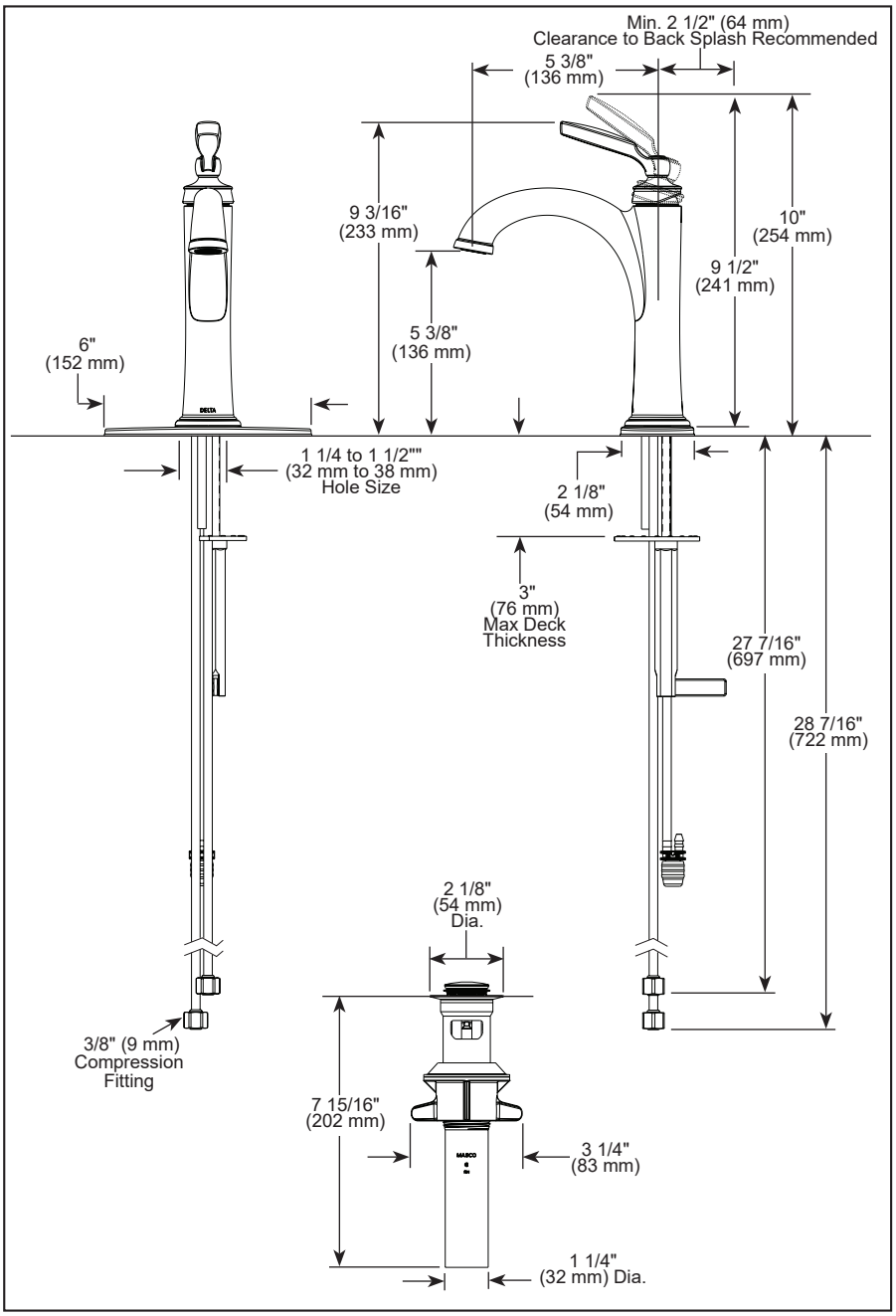

▲ Designate Proper Finish Suffix

STANDARD SPECIFICATIONS:

- Max flow rate 1.2 gpm @ 60 psi, 4.5 L/min @ 414 kPa
- One or three hole mount (escutcheon optional, included)
- Diamond coated ceramic cartridge
- 1/4" O.D. straight, staggered PEX supply tubes
- Models have metal drain with push pop-up type fitting with plated flange and stopper
- Optional red/blue indicator ring provided with model

WARRANTY

- Parts and Finish - Lifetime limited warranty; or for commercial purchasers, 10 years for multi-family residential (apartments and condominiums) and 5 years for all other commercial uses, in each case from the date of purchase.
- Electronic Parts and Batteries (if applicable) - 5 years from the date of purchase; or for commercial purchasers, 1 year from the date of purchase. No warranty is provided on batteries.

WaterSense Meets EPA Criteria
Certified by CSA Group

COMPLIES WITH:

- ASME A112.18.1/ CSA B125.1
- ASME A112.18.2 / CSA B125.2
- Indicates compliance to ICC/ANSI A117.1 - Valve control only
- EPA WaterSense®
- Verified compliant with 0.25% weighted average Pb content regulations.

Delta reserves the right (1) to make changes in specifications and materials, and (2) to change or discontinue models, both without notice or obligation. Dimensions are for reference only. See current full-line price book or www.deltafaucet.com for finish options and product availability.

DSP-L-532-MPU-DST Rev. A

Delta Faucet Company
55 E. 111th Street, Indianapolis, IN 46280
350 South Edgeware Road, St. Thomas, ON N5P 4L1
© 2021 Delta Faucet Company