BARTLETT

PFWSC4847 TWO HANDLE LAVATORY FAUCET

Product Features

- Max. flow rate: 1.2 gpm (4.5 L/min) at 60 psi
- Metal lever handle
- Ceramic Disc Cartridges
- Requires 3-hole sink with 4" on-center
- With brass pop-up assembly

Optional Parts

1.0 GPM Aerator	0BPF514321
0.5 GPM Aerator	0BPF530224*
Thick Deck Extension Kit	0BPF1A66D619N
Drain Lift Rod Extension	PF351NA

PFWSC4847

Codes and Certifications

- Certified to ASME A112.18.1 / CSA B125.1
- cUPC/IAPMO listed
- Handle ADA compliant
- NSF/ANSI/CAN 61: Q ≤1
- Watersense certified

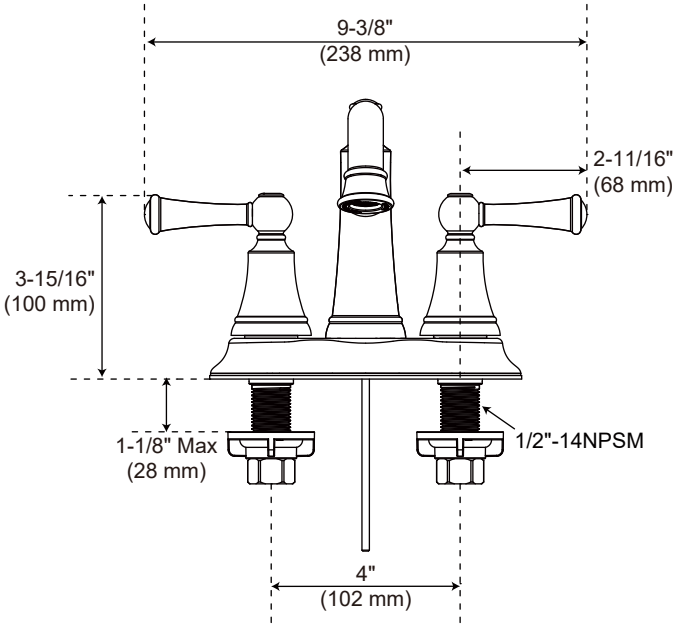

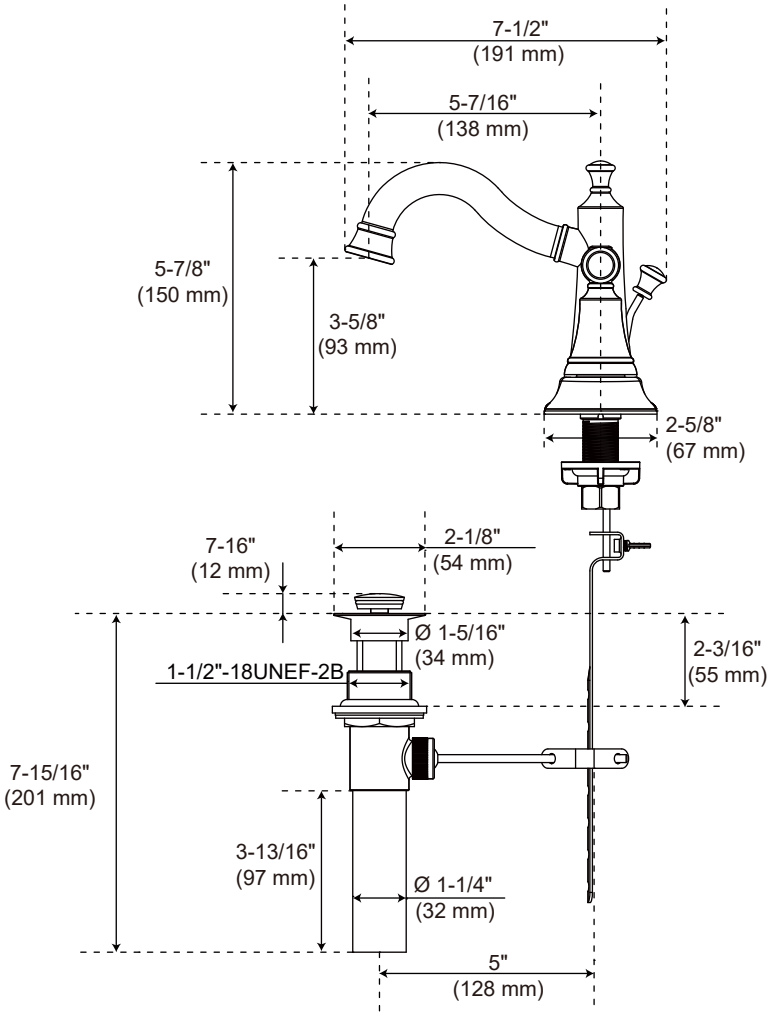

For detailed warranty information, visit **ferguson.com/proflo-faucet-warranty**.

©2025 Ferguson Enterprises, LLC. FG 03/2025-A