SPEC

PFXC9517

ROYSTONE SINGLE HANDLE KITCHEN FAUCET

Product Features

- Max. flow rate: 1.5 gpm at 60 psi
- Metal lever handle
- 1 or 3 hole installation
- Optional deck plate included
- Ceramic disc cartridge
- NSF/ANSI/CAN61: Q⩽1
- Three-function spray head: stream, spray and pause
- Certified to ASME A112.18.1/CSA B125.1
- cUPC/IAPMO listed
- ADA compliant

PFXC9517CP

Model Numbers

PFXC9517CP	Chrome
PFXC9517ZBN	Brushed nickel

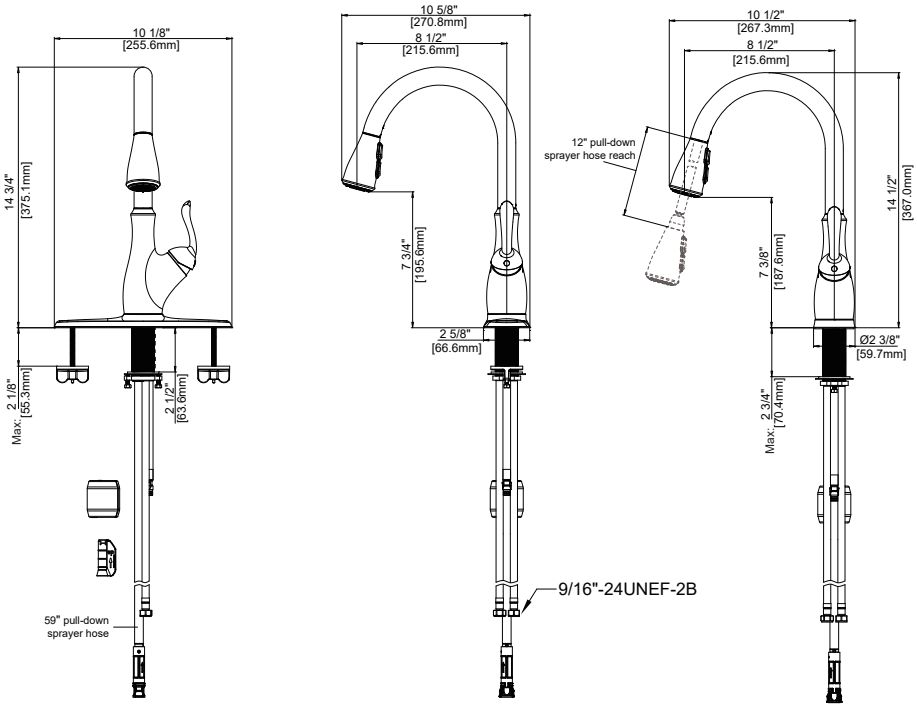

With Escutcheon

With Flange

Warranty and Codes

This product comes complete with installation, operating, care and maintenance instructions.
This PROFLO faucet carries a limited lifetime warranty when installed in residential applications.
The warranty is five years in commercial applications.
*Compliant with lead content requirements of California AB 1953.

GREEN UPC Water Efficiency

NSF/ANSI/CAN372
NSF/ANSI/CAN 61-9 Q≤1
UPC C

FERGUSON.COM/PROFLO

Distributed Exclusively by Ferguson and Wolseley Canada

©2022 Ferguson Enterprises, Inc. All Rights Reserved

06/01/22 Rev.A