ORVIS

PFXC7017 SINGLE HANDLE PULL-DOWN KITCHEN FAUCET

Product Features

- Max. flow rate: 1.5 gpm (5.67L/min) at 60 psi
- Metal lever handle
- Ceramic Disc Cartridges
- 1 or 3 hole installation
- Optional deck plate
- 3-Function sprayer -stream, full spray & pause with 360° swivel
- With 1/2"-14NPSM-2A x 29-1/2" flexible connectors

PFXC7017

Codes and Certifications

NSF/ANSI/CAN 372
NSF/ANSI/CAN 61:Q≤1

- Certified to ASME A112.18.1 / CSA B125.1
- cUPC/IAPMO listed
- Handle ADA compliant
- NSF/ANSI/CAN 61: Q ≤1

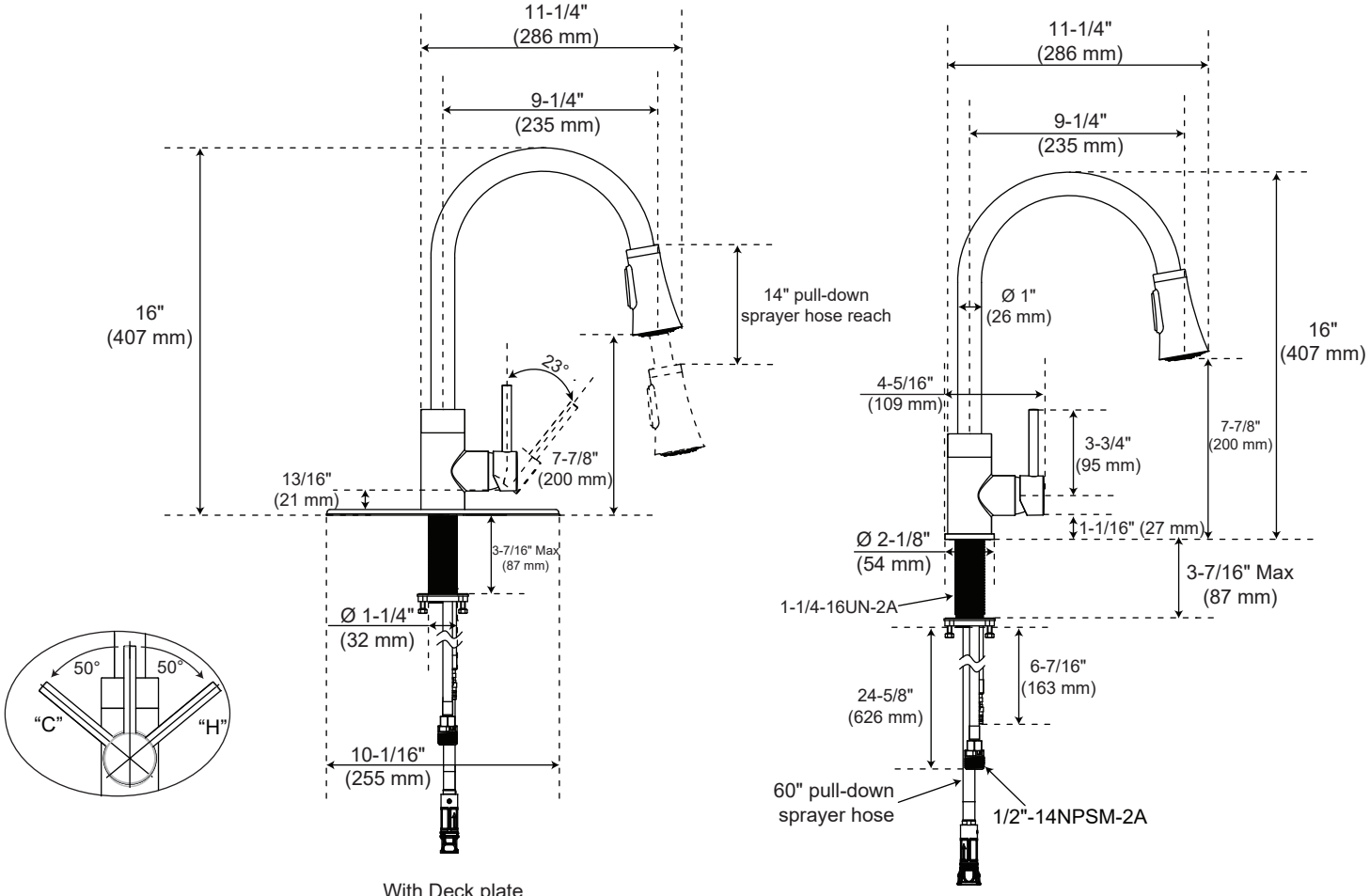

With Deck plate

With flange

For detailed warranty information, visit **ferguson.com/proflo-faucet-warranty**.

©2025 Ferguson Enterprises, LLC. FG 02/2025-A