KOHLER®

Artifacts®

Three-light sconce

K-32806-SC03

Features

- Clear glass shades with inner frosted glass diffusers for reduced glare
- Requires three bulbs with medium (E26) base; T10 bulb recommended (sold separately)
- Coordinates with faucets and accessories in the Artifacts collection
- Suitable for damp locations, per UL 1598
- Includes installation hardware
- Fixture is dimmable when paired with dimmer switch and compatible bulbs

Material

- Premium metal construction for durability and reliability
- KOHLER finishes resist corrosion and tarnishing

Installation

- For installation as a downlight only

Recommended Products/Accessories

K-23723 Faucet cleaner



Codes/Standards

UL 1598
CSA C22.2 No. 250.0

KOHLER® Indoor Lighting Fixtures Limited Warranty

See website for detailed warranty information.

Available Colors/Finishes

Color tiles intended for reference only.

Color	Code	Description
	SNL	Polished Nickel
	TTL	Titanium
	BNL	Brushed Nickel
	CPL	Polished Chrome
	BLL	Matte Black
	AFL	French Gold
	BVL	Brushed Bronze
	2GL	Brushed Moderne Brass

KOHLER®

Artifacts®

Three-light sconce

K-32806-SC03

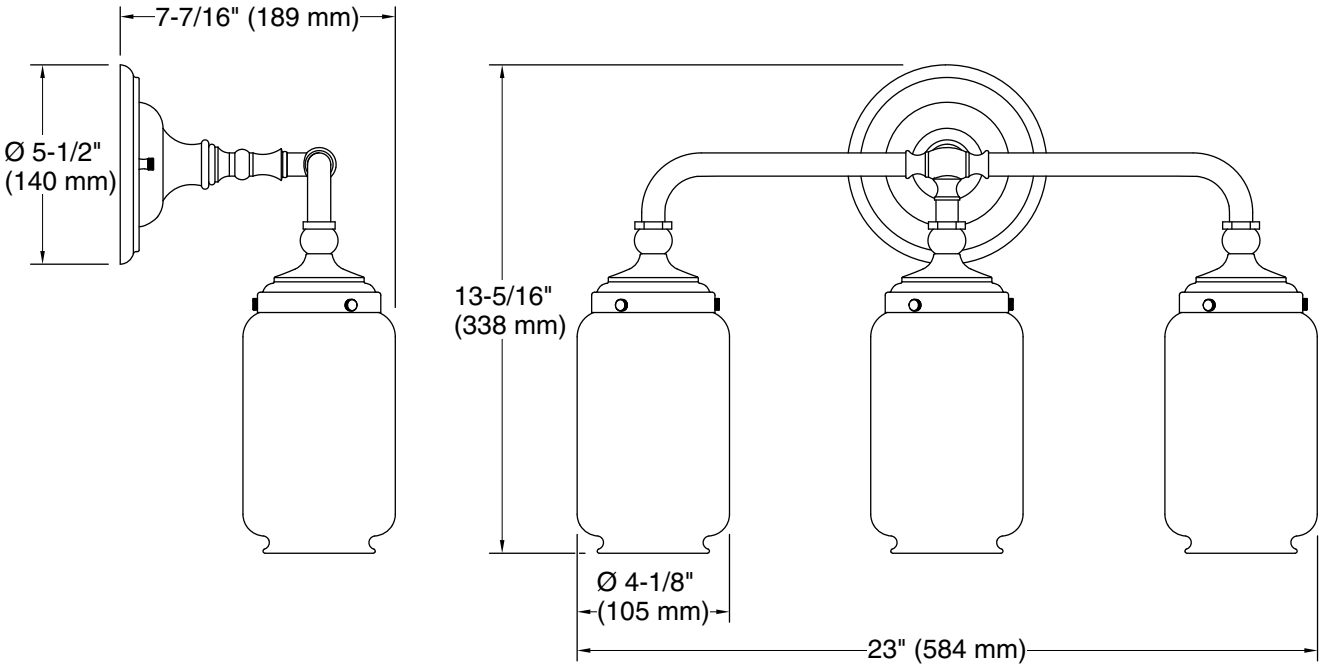

Required Electrical Service

One circuit required.

120 V, 1 A

Technical Information

All product dimensions are nominal.

Material:	Steel, Brass, Glass
Number of Lights:	3
Lighting Type:	Socket-based
Socket Type:	E-26 Medium
Number of Shades:	6
Shade Type:	Glass - frosted, Glass - clear
Hanging Type:	Non-hanging