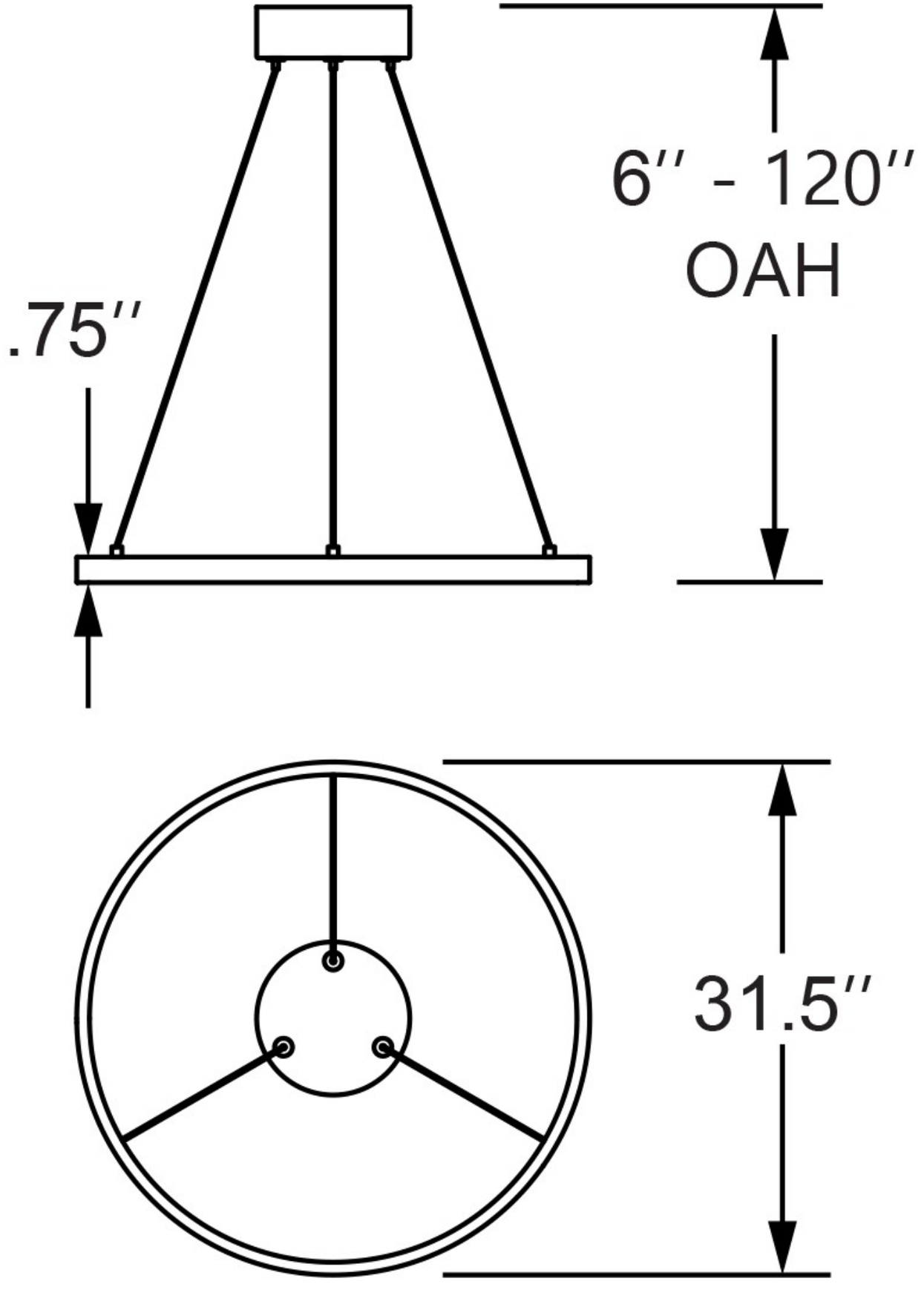
6″ - 120″
OAH
.75″
31.5″