DURASTAR™

PROJECT NAME _____

LOCATION _____

ARCHITECT _____

ENGINEER _____

CONTRACTOR _____

SUBMITTED BY _____ DATE _____

UNIT SUMMARY

Quantity						
Unit Designation						
Model No.						
Total Cooling						
Sensible Cooling						
Air Ent. Evaporator						
Air Lvg. Evaporator						
Heating Input						
Heating Output						
CFM/ESP						
EER/SEER						
Electrical						
Minimum Ampacity						
Min.-Max. Breaker						
Net Unit Weight						
Accessory						
Catalog Form Number						

ACCESSORIES:

NOTES:

PRINTED IN U.S.A. 8/22 QG FORM NO. MDS-1640

DR80UHAW***2 Upflow/Horizontal Gas Furnaces
Heating Stages: Two Stage
Input Rates: 50-100 kBTU [14.7-29.3 kW]

JOB NAME _____ LOCATION _____

CONTRACTOR _____ ORDER NO. _____

ENGINEER _____ UNIT MODEL NO. _____

SUBMITTED FOR ☐ APPROVAL ☐ RECORD COIL MODEL NO. _____

DATE _____ AIR HANDLER MODEL NO. _____

UNIT DATA

HEATING PERFORMANCE

TOTAL CAPACITY INPUT*..... _____ MBH [kW]

TOTAL CAPACITY OUTPUT* ..... _____ MBH [kW]

DESIGN TEMP. RISE..... _____ °F [°C] DB

AFUE ..... _____ %

CALIFORNIA SEASONAL EFFICIENCY..... _____ %

(*uses blower motor heat)

SUPPLY AIR BLOWER PERFORMANCE

TOTAL AIR SUPPLY..... _____ CFM [L/s]

TOTAL RESISTANCE EXTERNAL TO UNIT..... _____ IWG

BLOWER SPEED..... _____ RPM

POWER OUTPUT REQUIREMENT..... _____ BHP

MOTOR RATING ..... _____ HP [W]

POWER INPUT REQUIREMENT ..... _____ kW

ELECTRICAL DATA

POWER SUPPLY..... _____ Hz

TOTAL UNIT AMPACITY..... _____ AMPS

MINIMUM WIRE SIZE..... _____ AWG

MAXIMUM OVERCURRENT DEVICE FUSES/HACR BREAKER..... _____ AMPS

FEATURES

- **Diagnostics:** The Contractor App, built-in Bluetooth® technology makes monitoring, troubleshooting and repairing the product easier than ever before
- **Dip Switch Free Installation Commissioning via Bluetooth® Technology:** Seamless final install step without DIP switch configuration using the Contractor App
- **Ignition System:** Proven Direct Spark Ignition (DSI) for reliability and longevity
- **Two-Stage Heating:** Furnace operation mainly stays at low capacity around 60-65%, but will switch to high capacity to deliver stable heat distribution
- **Constant CFM Motor:** Truly variable speed technology allows for ultimate humidity control, quieter sound levels and year-round energy savings

FIELD INSTALLED ACCESSORIES

External Bottom Filter Rack RXGF-CB ..... ☐

External Side Filter Rack RXGF-CD ..... ☐

Indoor Coil Casing RXBC-D14A1 ..... ☐

Indoor Coil Casing RXBC-D17A1 ..... ☐

Indoor Coil Casing RXBC-D21A1 ..... ☐

Indoor Coil Casing RXBC-D21B1 ..... ☐

Indoor Coil Casing RXBC-D24A1 ..... ☐

Solid Bottom Kit RXGB-D14 ..... ☐

Solid Bottom Kit RXGB-D17 ..... ☐

Solid Bottom Kit RXGB-D21 ..... ☐

Solid Bottom Kit RXGB-D24 ..... ☐

4” Flue Adapter RXGW-C01 ..... ☐

ISO 9001:2015

Dual Fuel The Choice Is Yours

c UL us LISTED

AHRI CERTIFIED

Horizontal Application

WARNING

THIS FURNACE IS NOT APPROVED
OR RECOMMENDED FOR INSTALLATION
ON ITS BACK, WITH ACCESS DOORS
FACING UPWARDS.

Upflow Application

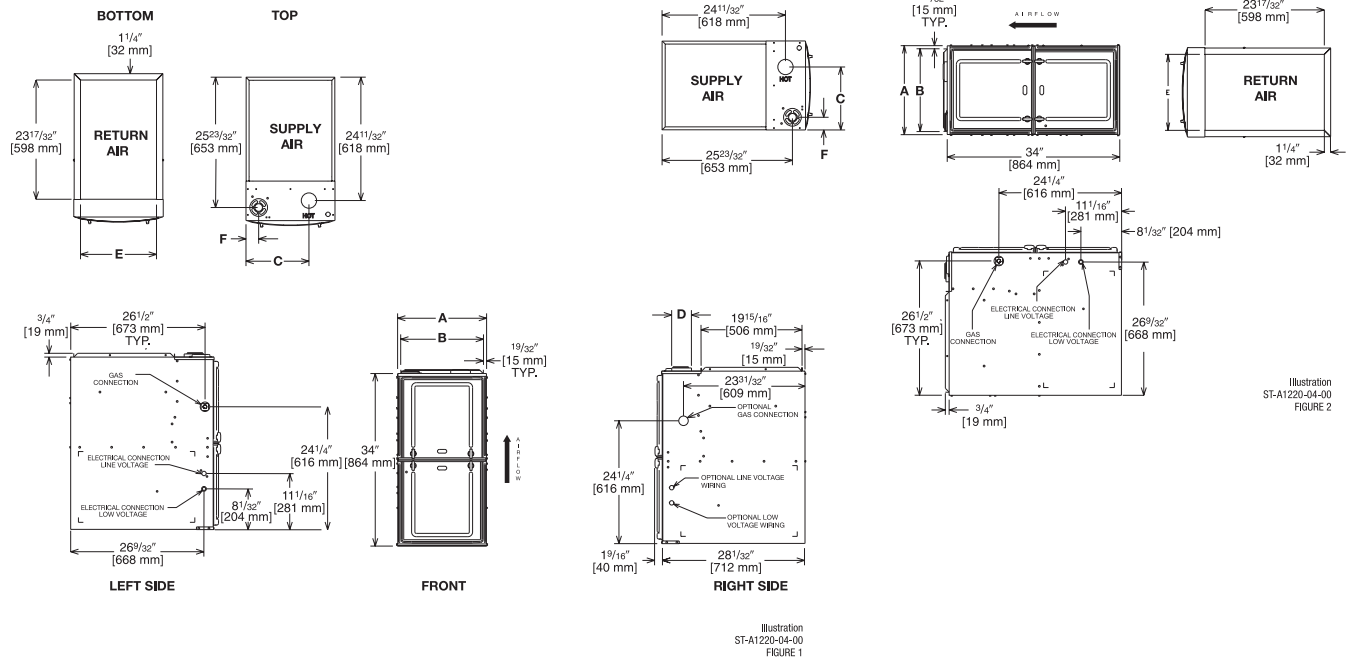

Illustration
ST-A1220-04-00
FIGURE 1

Illustration
ST-A1220-04-00
FIGURE 2

Dimensional Data: Upflow Model

MODEL DR80UHAW***2	A	B	C	D	E	F	MINIMUM CLEARANCE (IN.) [mm]					
							SUPPLY AIR SIDE	RETURN AIR SIDE	BACK	TOP	FRONT	VENT
050314	14 [356]	12 27/32 [326]	10 5/8 [270]	①	11 1/2 [292]	1 7/8 [48]	4 [102] ②	4 [102] ②	0	1 [25]	3 [76]	6 [152] ③
050417/75417	17 1/2 [445]	16 11/32 [415]	12 3/8 [314]	①	15 [381]	2 1/2 [64]	3 [76] ②	3 [76] ②	0	1 [25]	3 [76]	6 [152] ③
075521/100	21 [533]	19 27/32 [504]	14 1/8 [359]	①	18 1/2 [470]	2 1/2 [64]	0	0	0	1 [25]	3 [76]	6 [152] ③
125	24 1/2 [622]	23 11/32 [592]	15 7/8 [403]	①	22 [559]	2 1/2 [64]	0	0	0	1 [25]	3 [76]	6 [152] ③

Dimensional Data: Horizontal Model

MODEL DR80UHAW***2	A	B	C	D	E	F	MINIMUM CLEARANCE (IN.) [mm]					
							SUPPLY AIR SIDE	RETURN AIR SIDE	BACK	TOP	FRONT	VENT
050314	14 [356]	12 27/32 [326]	10 5/8 [270]	①	11 1/2 [292]	1 7/8 [48]	4 [102] ②	4 [102] ②	0	1 [25]	3 [76]	6 [152] ③
050417/75417	17 1/2 [445]	16 11/32 [415]	12 3/8 [314]	①	15 [381]	2 1/2 [64]	3 [76] ②	3 [76] ②	0	1 [25]	3 [76]	6 [152] ③
075521/100	21 [533]	19 27/32 [504]	14 1/8 [359]	①	18 1/2 [470]	2 1/2 [64]	0	0	0	1 [25]	3 [76]	6 [152] ③
125	24 1/2 [622]	23 11/32 [592]	15 7/8 [403]	①	22 [559]	2 1/2 [64]	0	0	0	1 [25]	3 [76]	6 [152] ③

NOTES: ① May require a 3" [76 mm] to 4" [102 mm] or 3" [76 mm] to 5" [127 mm] adapter.
② May be 0" [0 mm] with type B vent.
③ May be 1" [25 mm] with type B vent.

[ ] Designates Metric Conversions

Furnaces must be vented in accordance with the National Fuel Gas Code, ANSI Z223.1 and in accordance with local codes.

Before proceeding with installation, refer to installation instructions packaged with each model, as well as complying with all Federal, State, Provincial, and Local codes, regulations, and practices.

DURASTAR™

"In keeping with its policy of continuous progress and product improvement, Manufacturer reserves the right to make changes without notice."

©2023 Ferguson Enterprises, LLC 1022