PDM REF	D: 1.0	M: A.4

REV	DESCRIPTION	DATE	DRAFTER	ENGINEER	APPROVED
1	PRODUCTION RELEASE PER EO 13644-05	09/27/21	T. CHEN	J. GEPHART	S. BAKER

NOTES: UNLESS OTHERWISE SPECIFIED

1. INTERPRET DIMENSIONS PER ASME Y14.5M-1994
2. REFER TO PRO/E MODEL P13377/P13378/P13379 FOR DIMENSIONS NOT SHOWN. ⌓ .030 [0.76]
3. DIMENSIONS ARE IN INCHES. DIMENSIONS IN BRACKETS [X.XX] ARE IN MILLIMETERS AND SHOWN FOR REFERENCE ONLY. REFERENCE DIMENSIONS SHALL NOT BE USED FOR INSPECTION.
4. VISUALS MUST BE INSPECTED AND CONFORM TO THE VISUAL QUALITY STANDARD QP-BD-060 PER BALDWIN HARDWARE CORPORATION'S QUALITY ASSURANCE MANUAL.

   FINISHED COMPONENTS MUST COMPLY WITH ENVIRONMENTAL TEST STANDARD QP-HH-014 PER BALDWIN HARDWARE CORPORATION'S QUALITY ASSURANCE MANUAL.
5. ALL DIMENSIONS APPLY AFTER FINISHING.
6. REMOVE ALL BURRS AND SHARP EDGES
7. FILLETS AND RADII: R 0.005 - 0.030 [0.13 - 0.76]
8. TOLERANCES: .XX ± .010 [0.25]
   .XXX ± .005 [0.13]
   ANGLES ± .5°
9. ⏀ = CTQ PER HHI SPECIFICATION QP-04-HHI-001,
   1.33 Cpk REQUIRED. ALL OTHER DIMENSIONS REQUIRE 1.00 Cpk MINMUM.
10. ◇ = SIGNIFICANT CHARACTERISTIC
    A CONTROL PLAN FOR THIS FEATURE MUST EXIST AND MUST BE APPROVED BY HHI ENGINEERING PRIOR TO PRODUCTION.
11. ITEM SHALL MEET ALL QUALITY REQUIREMENTS SPECIFIED IN BALDWIN HARDWARE CORPORATION'S QUALITY ASSURANCE MANUAL.

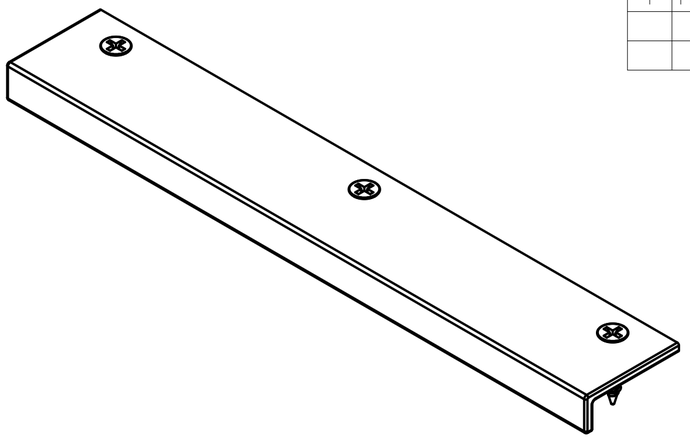

P13434 (6") 4622

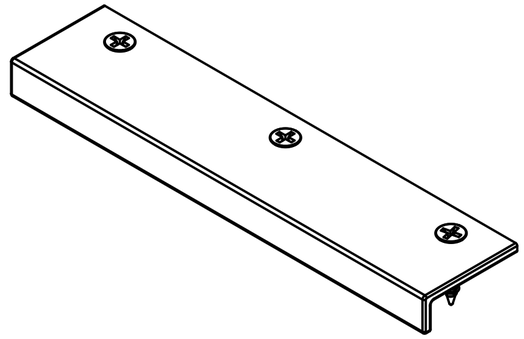

P13433 (4") 4621

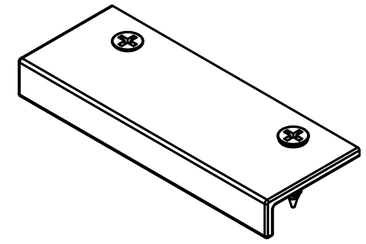

P13432 (2") 4620

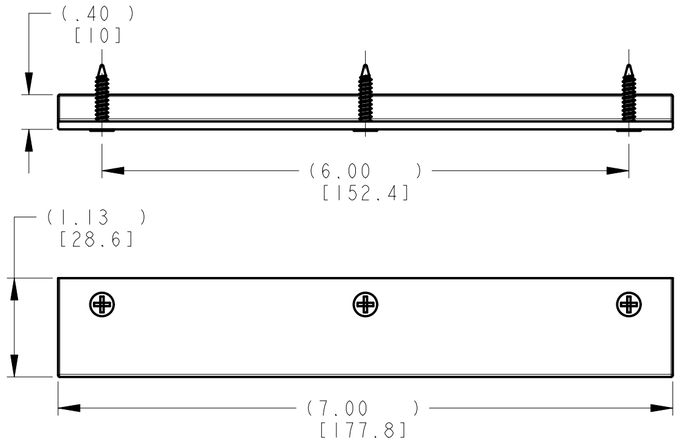

P13434

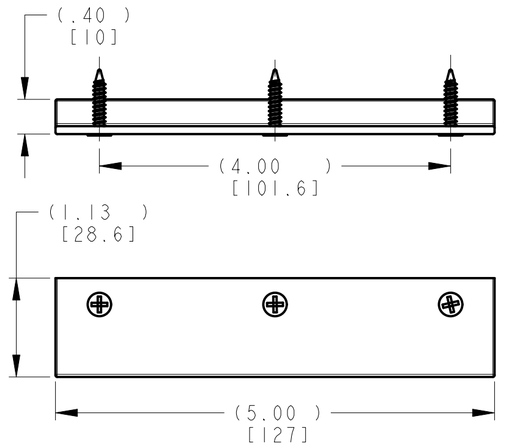

P13433

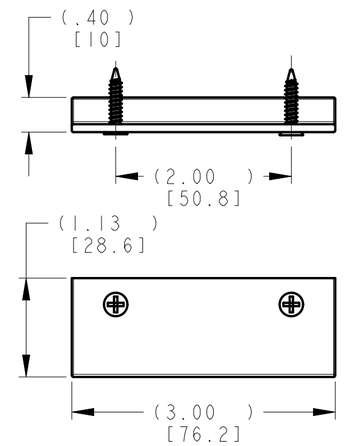

P13432

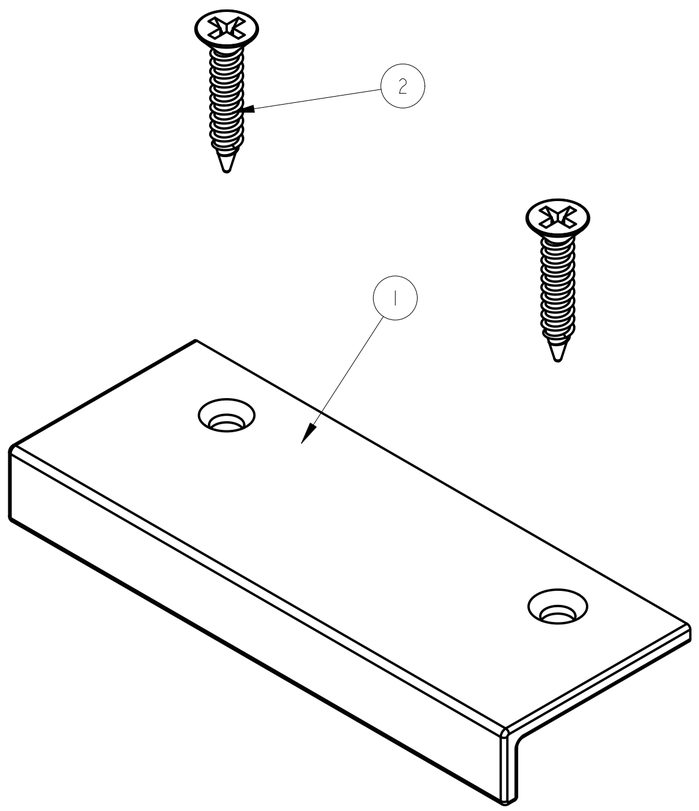

ITEM NO.	DESCRIPTION	QTY	DWG NO.	PART NO.
2	FLAT HEAD PHILLIPS	3	P13644	1407.XXX.00009
1	EDGE PULL, 4"	1	P13378	4621.XXX.00002

P13433 4621.XXX.BIN ASSEMBLY

ITEM NO.	DESCRIPTION	QTY	DWG NO.	PART NO.
2	FLAT HEAD PHILLIPS	3	P13644	1407.XXX.00009
1	EDGE PULL, 6"	1	P13379	4622.XXX.00002

P13434 4622.XXX.BIN ASSEMBLY

ITEM NO.	DESCRIPTION	QTY	DWG NO.	PART NO.
2	FLAT HEAD PHILLIPS	2	P13644	1407.XXX.00009
1	PULL, EDGE	1	P13377	4620.XXX.00002

P13432 4620.XXX.BIN ASSEMBLY

DRAFTER	T.CHEN	DATE 12/05/20
CHECKED	C.RAO	DATE 12/05/20
ENGINEER	T.CHEN	DATE 12/05/20
APPROVED	S.BAKER	DATE 12/05/20

THIRD ANGLE PROJECTION

BALDWIN
Spectrum Brands | Hardware & Home Improvement

THIS DOCUMENT IS THE PROPERTY OF SPECTRUM BRANDS, INC AND/OR ITS AFFILIATES. THE CONTENTS OF THIS DOCUMENT ARE CONFIDENTIAL AND CONSTITUTE TRADE SECRETS PROPRIETARY TO SPECTRUM BRANDS. NEITHER THIS DOCUMENT NOR ITS CONTENTS SHALL BE DISCLOSED TO ANY UNAUTHORIZED PERSON, COPIED, OR PUBLISHED WITHOUT SPECTRUM BRANDS' PRIOR WRITTEN CONSENT.

SPECTRUM BRANDS, INC HARDWARE AND HOME IMPROVEMENT
19701 DA VINCI, LAKE FOREST, CA 92610

TITLE: EDGE PULL

SIZE		DWG NO	REV	ITER
C	DO NOT SCALE DRAWING	P13432	1	0

RELEASE STATE: Production
SCALE 1/1 | PART # | SHEET 1 OF 1