KOHLER. Faucets

Purist®

30" four-function handshower kit, 2.5 gpm

K-22178

Features

- Includes Purist® 2.5-gpm multifunction handshower, 60" metal hose, 28" slidebar and contemporary slidebar trim
- Multifunction showerhead and handshower each have advanced spray engines to provide three experiences: full coverage, pulsating massage, and silk spray
- Full coverage spray produces an encompassing spray ideal for everyday use
- Pulsating massage spray targets sore muscles to ease away aches and pains
- Silk spray releases a dense, luxurious spray ideal for rinsing
- Thumb tab allows for a smooth transition between sprays
- Combination of balance, weight, grip, and angle makes this handshower comfortable and easy to use
- MasterClean™ sprayface features an easy-to-clean surface that withstands mineral buildup and maximizes spray performance
- 2.5 gpm (9.5 lpm) maximum flow rate
- Slidebar features adjustable mounting brackets for installation flexibility
- Coordinates with Purist®, Stillness®, and Composed® faucets and accessories
- Features a nonpositive shutoff: water-saving pause mode to temporarily reduce water flow
- Pause feature temporarily pauses water flow to conserve water while you lather, shave, or shampoo

Material

- KOHLER finishes resist corrosion and tarnishing



ADA

Codes/Standards

ASME A112.18.1/CSA B125.1
DOE - Energy Policy Act 1992
ADA
ICC/ANSI A117.1
NOM Standards
NOM 008-CONAGUA

KOHLER® Faucet Lifetime Limited Warranty

See website for detailed warranty information.

Available Colors/Finishes

Color tiles intended for reference only.

Color	Code	Description
	CP	Polished Chrome
	SN	Vibrant® Polished Nickel
	BN	Vibrant® Brushed Nickel
	BV	Vibrant® Brushed Bronze
	BL	Matte Black
	BGP	Brushed Graphite

KOHLER Faucets

Purist®

30" four-function handshower kit, 2.5 gpm

K-22178

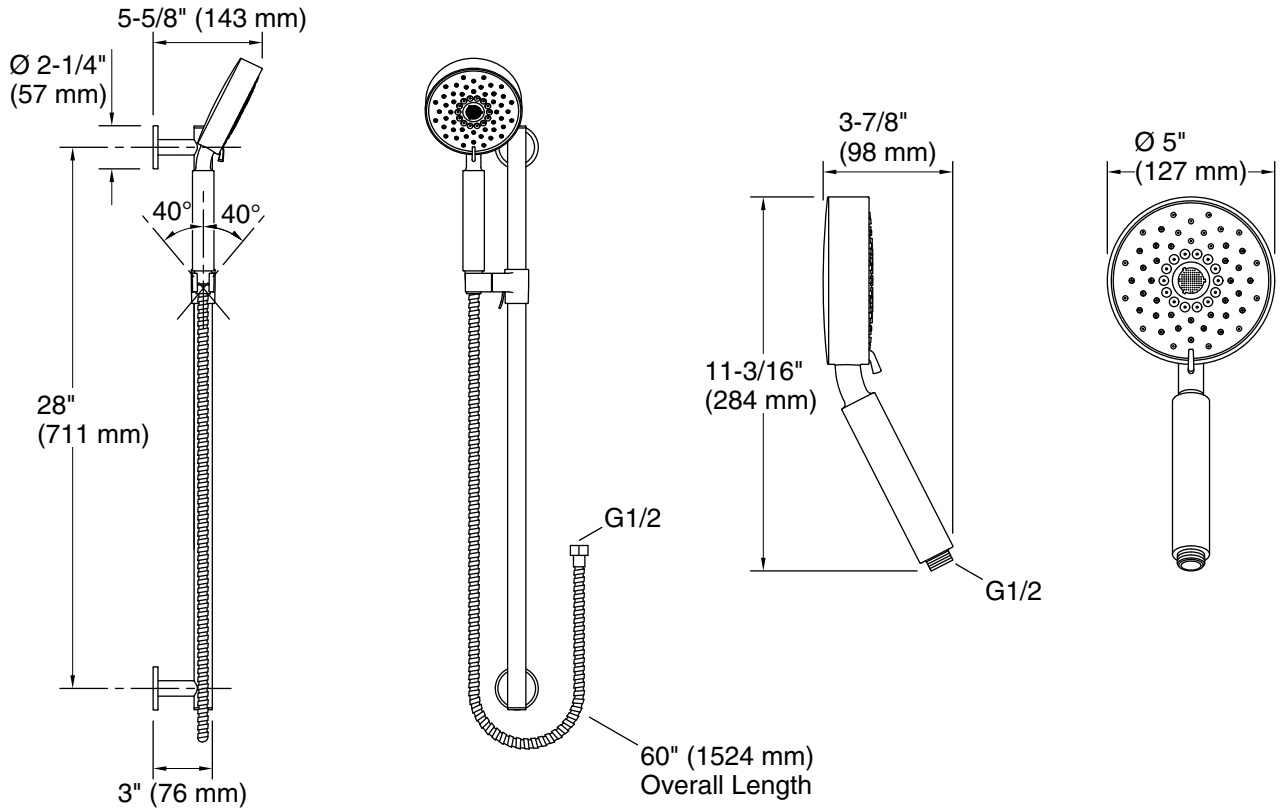

Technical Information

All product dimensions are nominal.

Spout:

Handshower rated max flow:	2.5 gal/min (9.5 l/min)

Notes

Install this product according to the installation instructions.

IMPORTANT! The slide bar must be mounted to stud framing supports at both the top and bottom mounting locations. Plastic wall anchors will not support the slide bar. Do not use or depend on plastic wall anchors to attach the slide bar.

Plumbing codes may require that an atmospheric vacuum breaker be installed in-line to handshowers. Consult with local codes.

ADA compliant when installed to the specific requirements of these regulations.