KOHLER. Faucets

Artifacts®

MasterShower® transfer valve trim with cross handle

K-T72770-3

Features

- Valve (sold separately) can be configured on site for 2- or 3-outlet operation
- Complements Artifacts faucets and accessories
- Trim only; requires K-728-K two- or three-way transfer valve, or K-737-K two- or three-way diverter valve (sold separately)

Material

- KOHLER finishes resist corrosion and tarnishing
- Premium material construction with metal handle ensures reliability and durability

Installation

- Trim only; requires valve to complete installation (sold separately)
- Patented K-joint installation technology ensures consistent trim appearance, regardless of variability in valve rough-in

Required Products/Accessories

K-728-K 3/4" two- or three-way transfer valve

or

K-737-K 3/4" Two- or Three-Way Diverter Valve



ADA

Codes/Standards

ASME A112.18.1/CSA B125.1
ADA
ICC/ANSI A117.1

KOHLER® Faucet Lifetime Limited Warranty

See website for detailed warranty information.

Available Colors/Finishes

Color tiles intended for reference only.

Color	Code	Description
	CP	Polished Chrome
	SN	Vibrant® Polished Nickel
	BN	Vibrant® Brushed Nickel
	BV	Vibrant® Brushed Bronze

KOHLER. Faucets

Artifacts®

MasterShower® transfer valve trim with cross handle

K-T72770-3

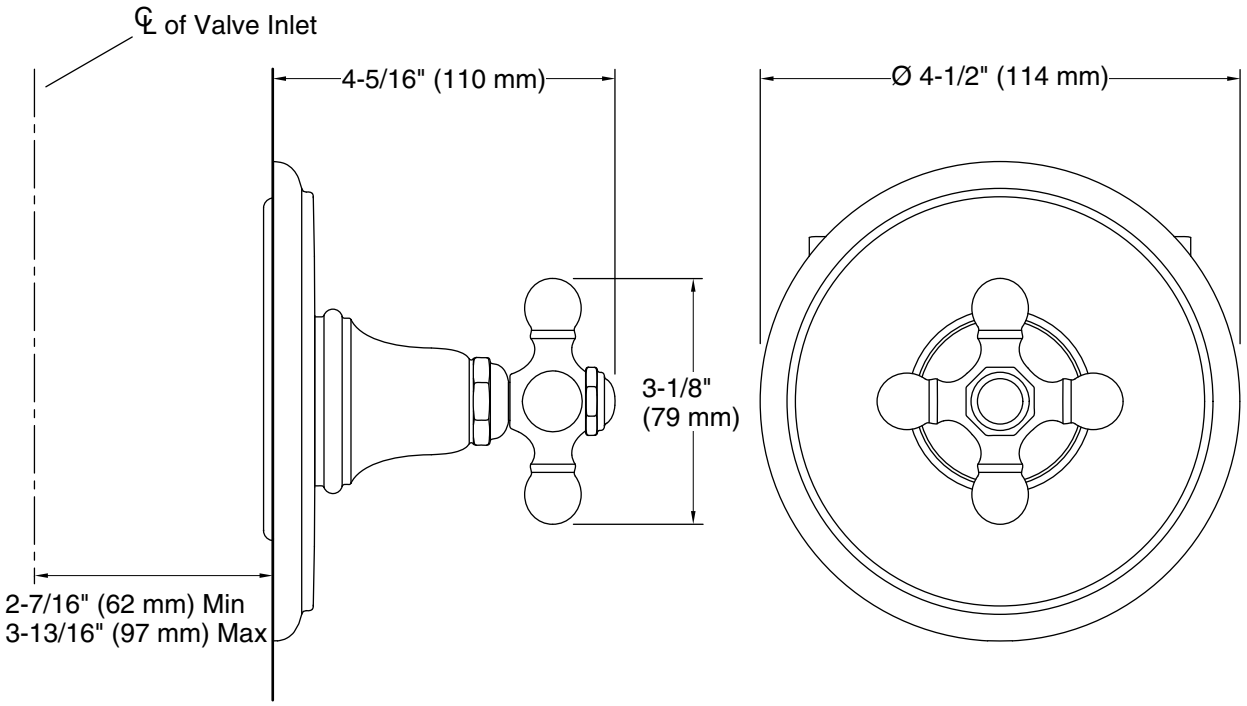

Technical Information

All product dimensions are nominal.

Spout:

Notes

Install this product according to the installation instructions.

ADA compliant when installed to the specific requirements of these regulations.