KOHLER®

Components®
3" cabinet pull
K-78386

Material
- Premium metal construction for durability and reliability
- KOHLER finishes resist corrosion and tarnishing

Installation
- Installation template and tools included



Codes/Standards
None Applicable

KOHLER® Faucet Lifetime Limited Warranty
See website for detailed warranty information.

Available Colors/Finishes
Color tiles intended for reference only.

Color	Code	Description
	CP	Polished Chrome
	SN	Vibrant® Polished Nickel
	AF	Vibrant® French Gold
	BN	Vibrant® Brushed Nickel
	BV	Vibrant® Brushed Bronze
	BL	Matte Black
	2MB	Vibrant® Brushed Moderne Brass
	TT	Vibrant Titanium
	BGP	Brushed Graphite

KOHLER®

Components®

3" cabinet pull

K-78386

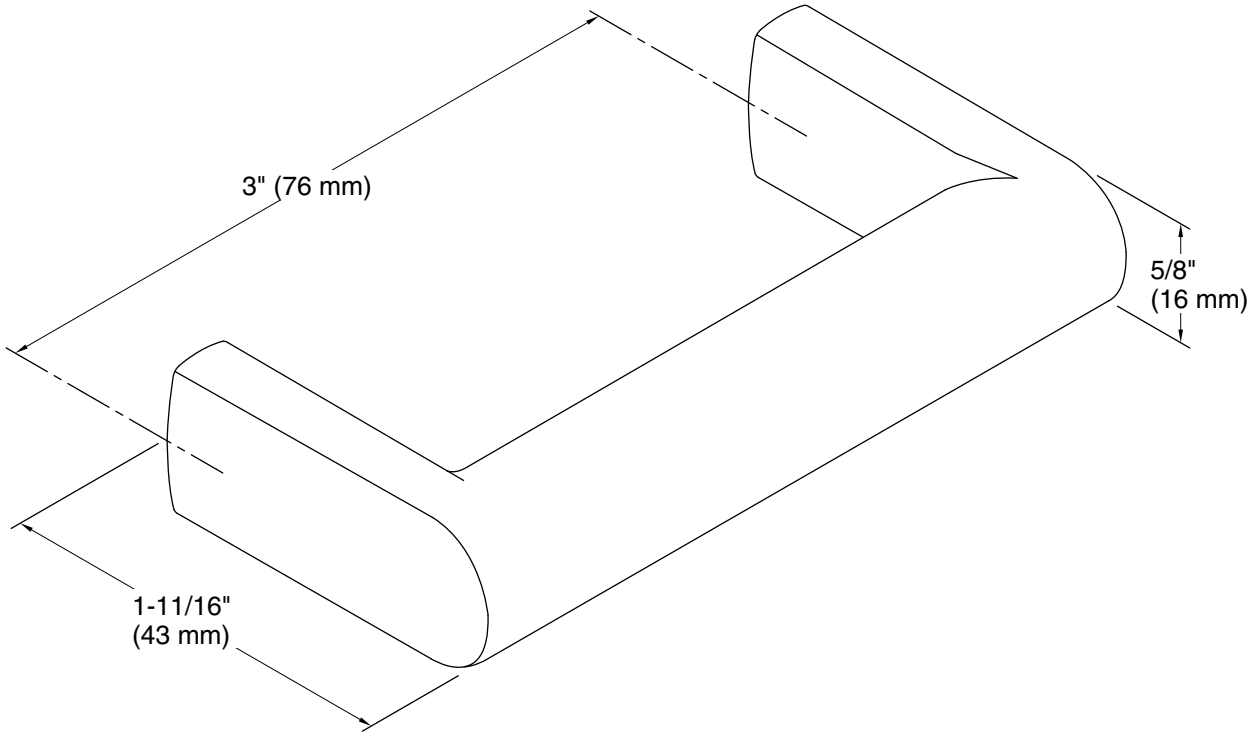

Technical Information

All product dimensions are nominal.

Material: Zinc

Notes

Install this product according to the installation instructions.

CAUTION: Risk of personal injury. Do not install these products in any area where they are likely to be used inadvertently as a grab bar or support bar. These products are not designed or intended for use as a grab bar or support bar.