KOHLER Faucets

Components®

Rite-Temp® Diverter Valve Trim

K-T78016-8

Features

- Integrated push-button diverter
- Includes faceplate with metal Oyl handle and push-button diverter
- A single handle controls both on/off activation and temperature setting
- Antiscald protection
- Coordinates with Components faucets, accessories, and showering components to complete your bathroom
- Pressure-balancing diaphragm technology maintains outlet temperature within +/-3°F during water pressure fluctuations

Material

- Premium material construction with metal handle ensures reliability and durability
- KOHLER finishes resist corrosion and tarnishing

Installation

- Trim only; requires valve to complete installation (sold separately)

Required Products/Accessories

K-11748 Series Rite-Temp® Valves

Adapters, Rough-in and Extension Kits

1204798	Range: 3-5/8" (92 mm) - 4-3/8" (111 mm)

Recommended Products/Accessories

K-23723 Faucet cleaner

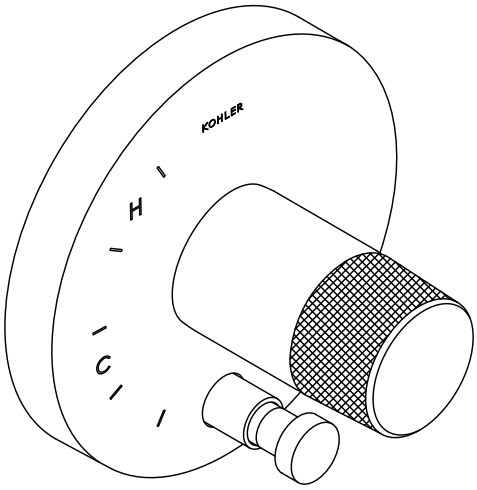

Codes/Standards

ASME A112.18.1/CSA B125.1

KOHLER® Faucet Lifetime Limited Warranty

See website for detailed warranty information.

Available Colors/Finishes

Color tiles intended for reference only.

Color	Code	Description
	CP	Polished Chrome
	BN	Vibrant® Brushed Nickel
	BL	Matte Black
	2MB	Vibrant® Brushed Moderne Brass
	TT	Vibrant Titanium

KOHLER Faucets

Components®

Rite-Temp® Diverter Valve Trim

K-T78016-8

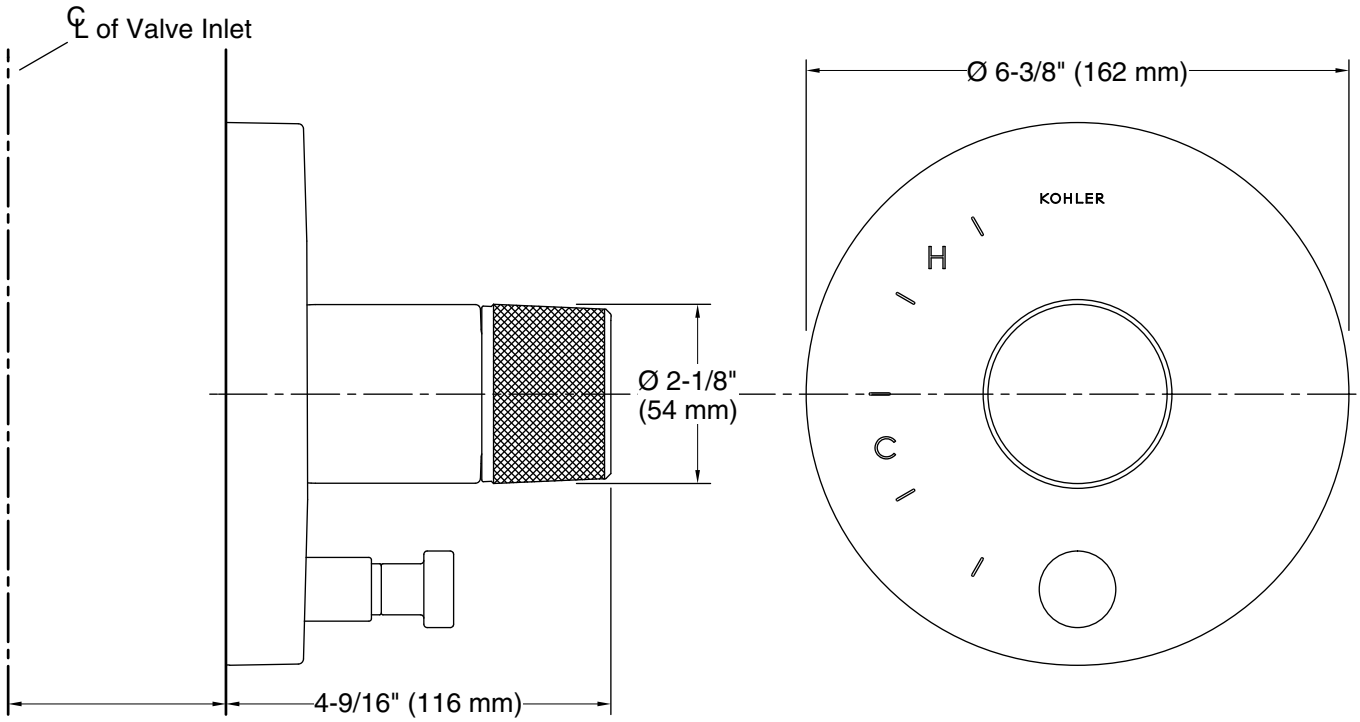

If 3-5/8" (92 mm) to 4-3/8" (111 mm) use deep roughing-in kit.

Technical Information

All product dimensions are nominal.

Drain included: No

Notes

Install this product according to the installation instructions.

Install straight pipe or tube drop of 7" (178 mm) to 18" (457 mm) with single elbow between the valve and the wall-mount spout.